34LYM195

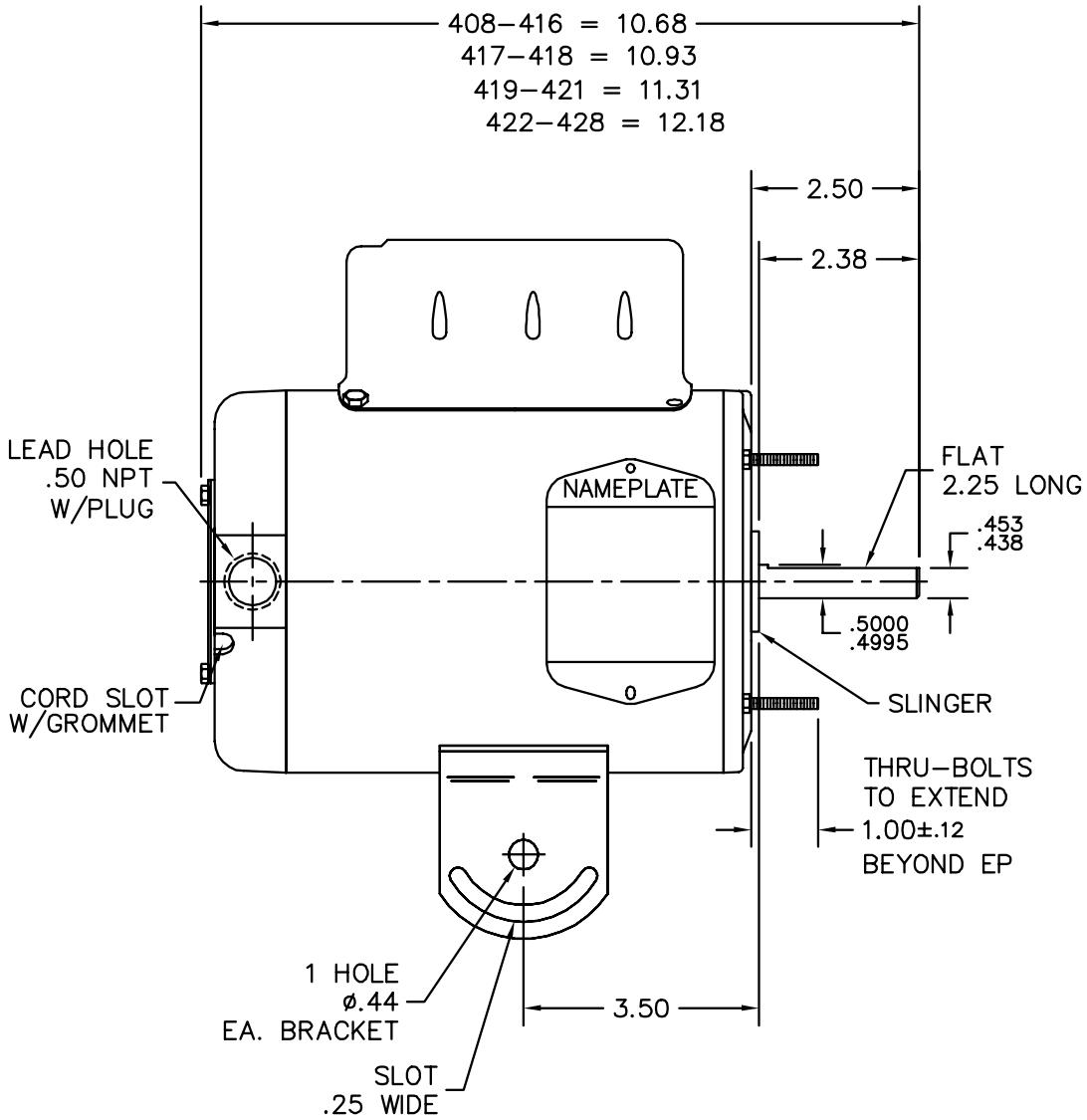

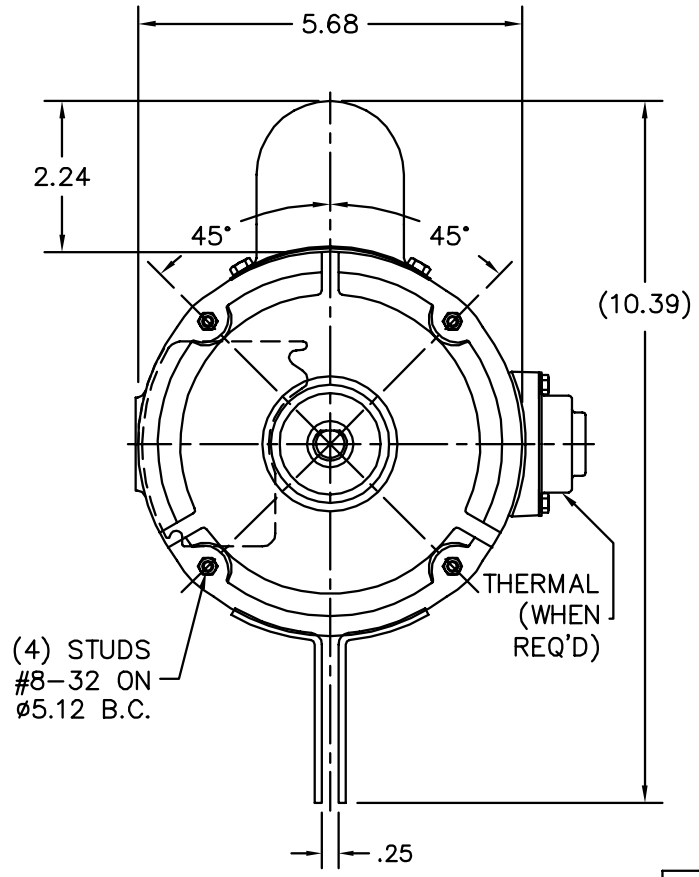

NOTE:
THRU–BOLTS ARE ON ø5.12 B.C.

CUSTOMER IS RESPONSIBLE FOR DETERMINING THAT BALDOR'S PRODUCT WILL PERFORM SUITABLY IN THE INTENDED APPLICATION.

REV. DESC: NEW			BALDOR
REV. LTR: –	VERSION: 00	TDR: 000000789650	
FILE: \AAA\00199\030		REVISED: 11:52:08 03/18/2013	PED MOUNT 34C NEMA 48YZ TEAO TERM PANEL, EXT TBLTS
MTL: –		BY: ENBENBO	SH 1 of 1

34LYM195