Browning® Mounted Ball Bearings

Duty: Intermediate

Rolling Elements: Ball

Housing: Cast Iron Tapped Base Pillow Block

Self Alignment: +/- 1.5 Degrees

Lock: Eccentric

Seal: Contact

Temperature: -20° to 200°F

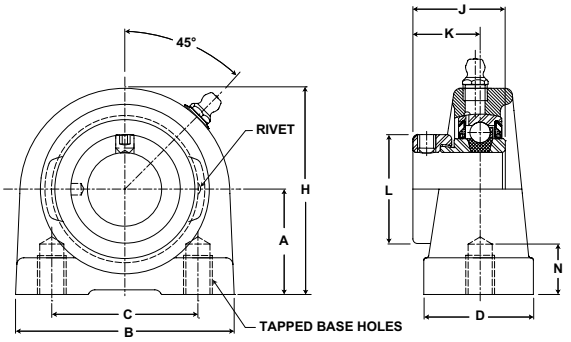

VTBE 100 Series Intermediate Duty Tapped Base Pillow Blocks - Eccentric Locking

Bore Diameter inch	Part No.	Bearing Insert No.	Basic Dynamic Rating lb/N	Dimensions inch / mm								Tapped Hole Thread Size	N Min Tap Depth	Unit Wt. lb/kg
				A	B	C	D	H	J	K	L			
3/4	VTBE-112	VE-112	2611 11614	1 5/16 33.3	2 7/8 73.0	2 50.8	1 1/2 38.1	2 9/16 65.1	1 17/64 32.1	59/64 23.4	1 5/16 33.3	3/8-16	1/2	1.5 .68
7/8 15/16 1	VTBE-114 VTBE-115 VTBE-116	VE-114 VE-115 VE-116	2801 12459	1 7/16 36.5	3 76.2	2 50.8	1 1/2 38.1	2 13/16 71.4	1 17/64 32.1	59/64 23.4	1 1/2 38.1	3/8-16	1/2	1.6 .73
1 1/8 1 3/16 1 1/4	VTBE-118 VTBE-119 VTBE-120S	VE-118 VE-119 VE-120S	4381 19487	1 11/16 42.9	4 101.6	3 76.2	1 1/2 38.1	3 3/8 85.7	1 27/64 36.1	1 3/64 26.6	1 3/4 44.5	7/16-14	5/8	2.5 1.13
1 1/4 1 3/8 1 7/16	VTBE-120 VTBE-122 VTBE-123	VE-120 VE-122 VE-123	5782 25718	1 7/8 47.6	4 1/4 108.0	3 1/4 82.6	1 7/8 47.6	3 3/4 95.3	1 37/64 40.1	1 5/32 29.4	2 3/16 55.6	1/2-13	3/4	3.4 1.54
1 1/2	VTBE-124	VE-124	7340 32648	1 15/16 49.2	4 5/8 117.5	3 1/2 88.9	1 7/8 47.6	3 15/16 100.0	1 49/64 44.8	1 9/32 32.5	2 3/8 60.3	1/2-13	3/4	3.8 1.72
1 11/16 1 3/4	VTBE-127 VTBE-128	VE-127 VE-128	7901 35144	2 1/8 54.0	5 127.0	3 3/4 95.3	2 50.8	4 1/4 108.0	1 49/64 44.8	1 9/32 32.5	2 1/2 63.5	1/2-13	3/4	4.7 2.13
1 15/16 2	VTBE-131 VTBE-132S	VE-131 VE-132S	7889 35090	2 1/4 57.2	5 1/2 139.7	4 101.6	2 50.8	4 5/8 117.5	1 25/32 45.2	1 9/32 32.5	2 3/4 69.9	5/8-11	7/8	5.7 2.59

Metric dimensions for reference only.
Not all parts are available from stock. Please contact customer service for availability (800) 626-2120.
For more information on bearing capabilities outside of our standard offering, please contact Application Engineering (800) 626-2093.