35LYA003

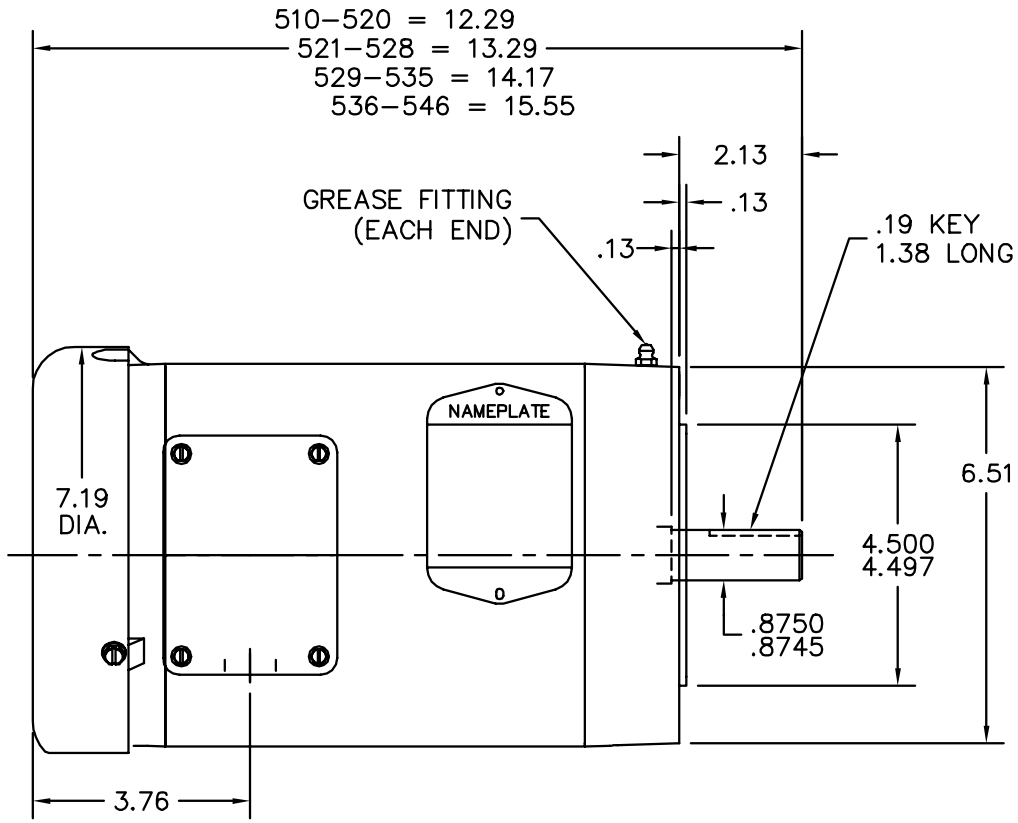

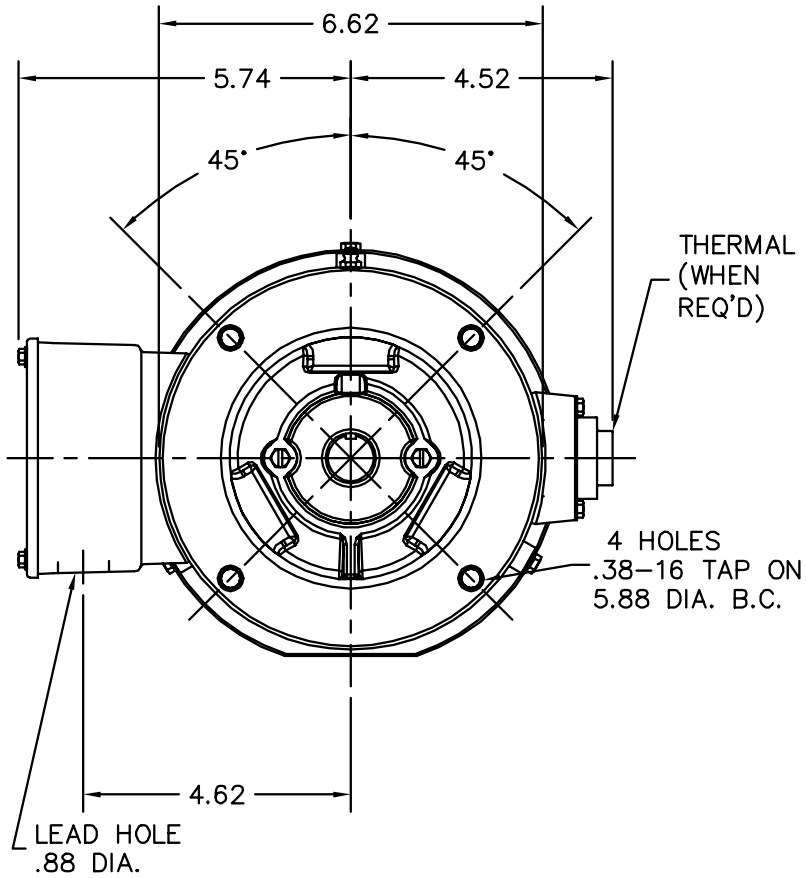

CUSTOMER IS RESPONSIBLE FOR DETERMINING THAT BALDOR'S PRODUCT WILL PERFORM SUITABLY IN THE INTENDED APPLICATION.

REV. DESC: CLEAN UP LAYOUT		
REV. LTR: P	VERSION: 07	TDR: 000001074967
FILE: \AAA\00004\893	REVISED: 04:33:50 06/14/2018	BY: ENBRAMO
MTL: –		

BALDOR - RELIANCE®

STD VERT 143–5TC TEFC 35M

SH 1 of 1

35LYA003