35LYJ302

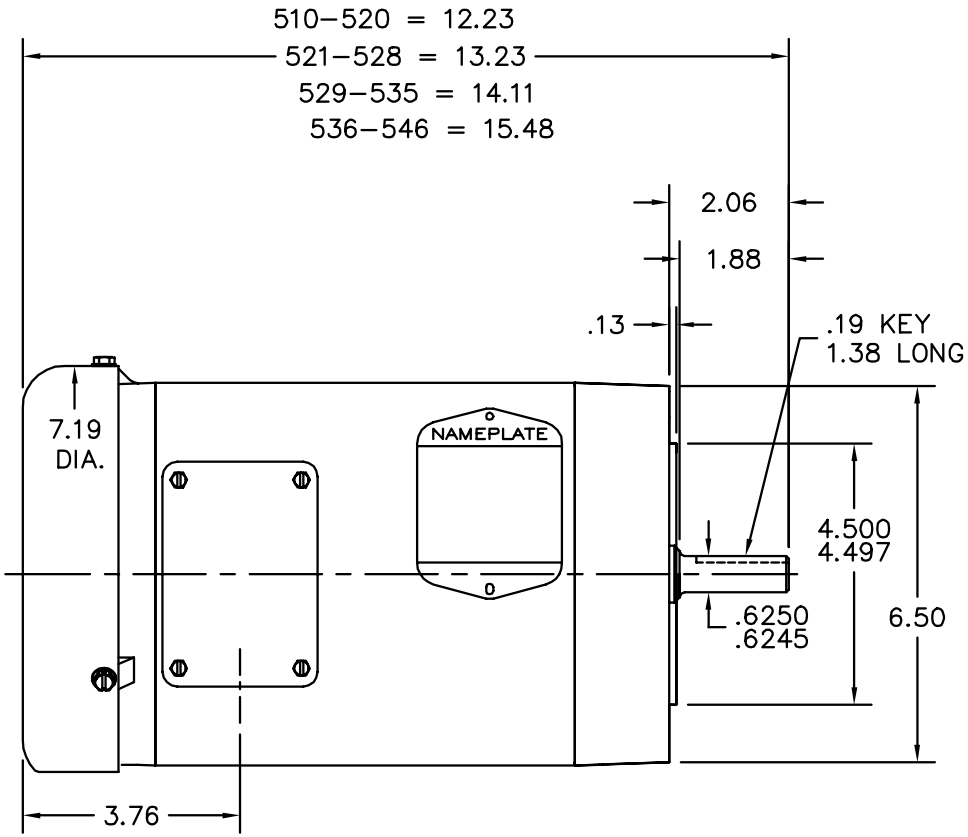

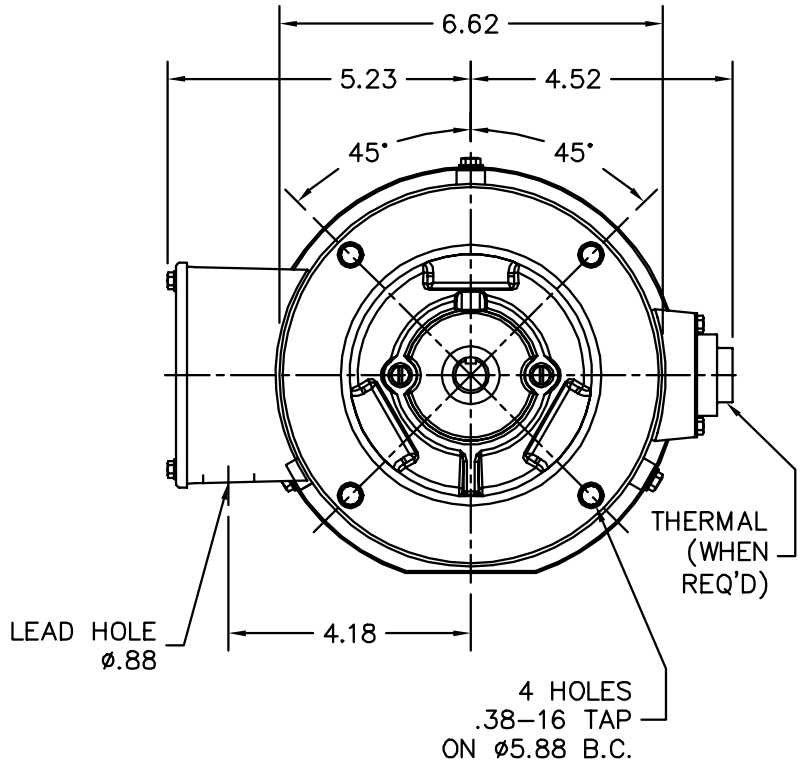

CUSTOMER IS RESPONSIBLE FOR DETERMINING THAT BALDOR'S PRODUCT WILL PERFORM SUITABLY IN THE INTENDED APPLICATION.

REV. DESC: REPLACE ENDPLATES		
REV. LTR: E	VERSION: 04	TDR: 000001063223
FILE: \AAA\00041\631	REVISED: 09:04:12 03/07/2018	BY: FGCHAH1
MTL: –		

BALDOR

VERT 56C TEFC 35M

SH 1 of 1

35LYJ302