35LYM317

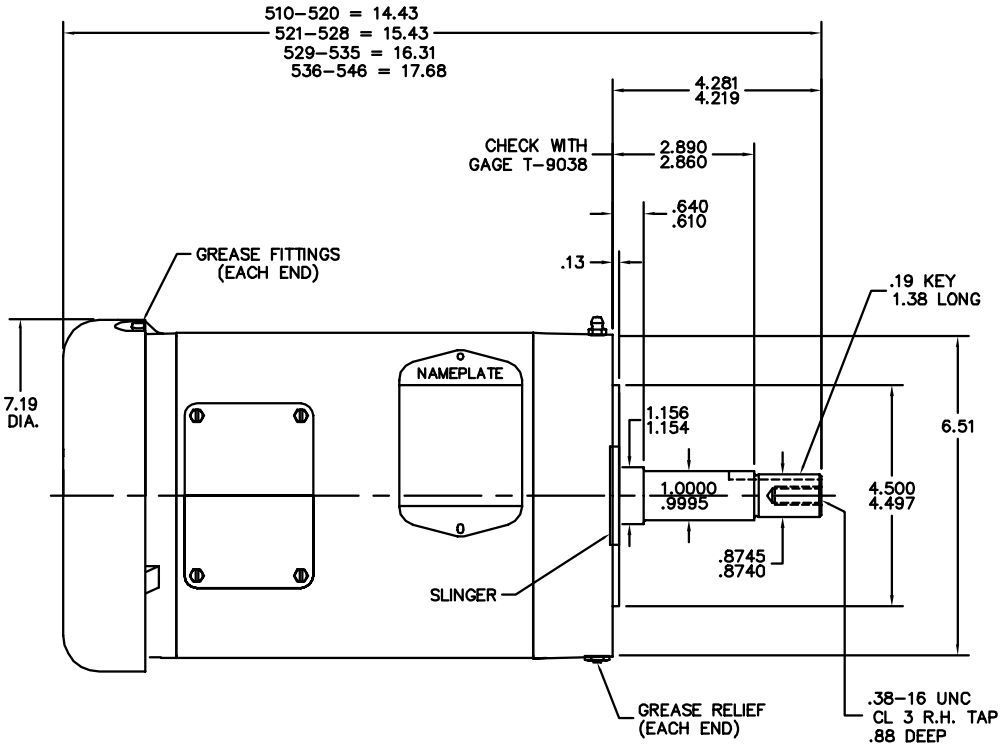

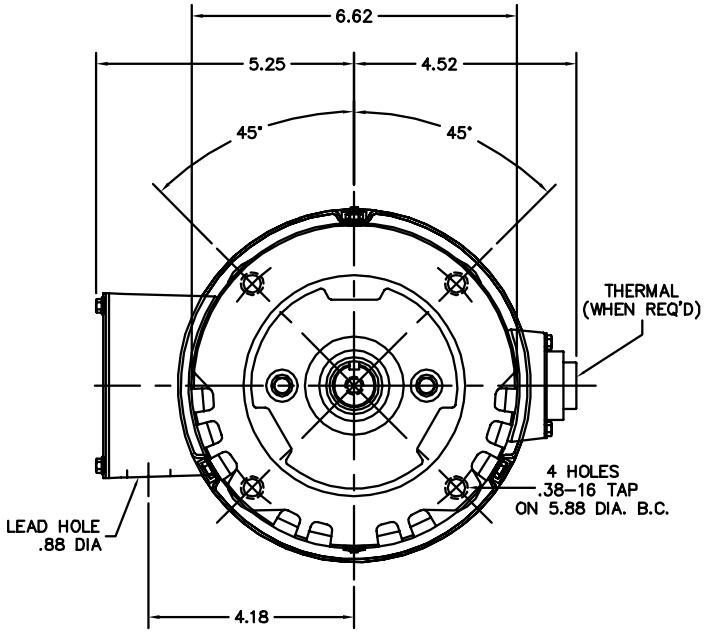

PULLEY END DETAIL

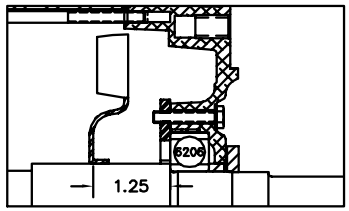

CUSTOMER IS RESPONSIBLE FOR DETERMINING THAT BALDOR'S PRODUCT WILL PERFORM SUITABLY IN THE INTENDED APPLICATION.

REV. DESC: REPLACE ENDPLATES			BALDOR - RELIANCE®
REV. LTR: D	VERSION: 01	TDR: 000001065250	
FILE: \AAA\00013\912	REVISED: 02:59:26 03/22/2018	BY: USJOBUR22	SPECIAL VERT FACE MTD 143–5JM TEFC 35M
MTL: –			SH 1 of 1

35LYM317