07LYK370

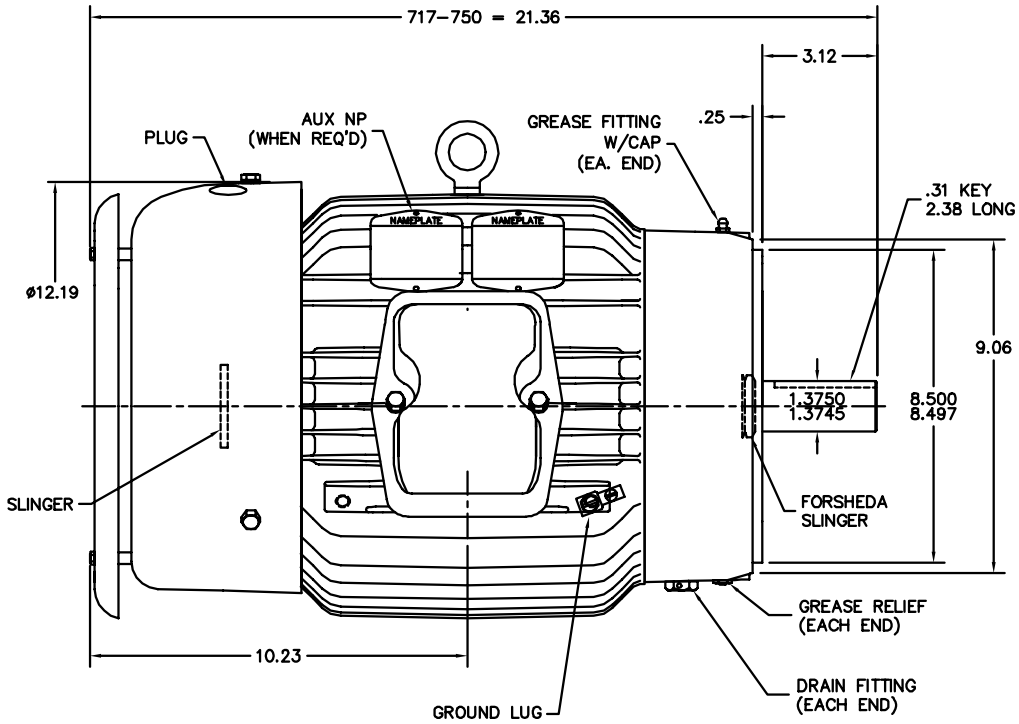

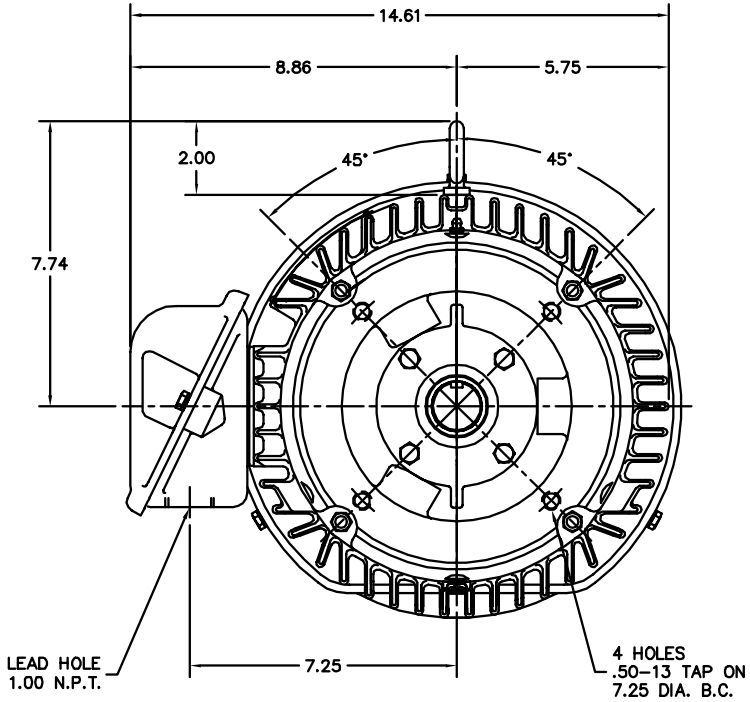

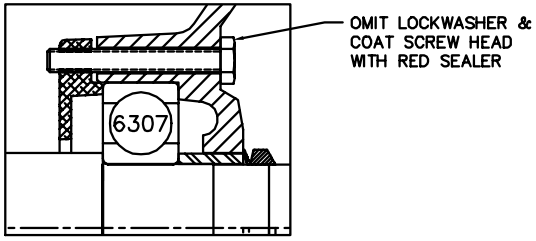

PULLEY END DETAIL

CUSTOMER IS RESPONSIBLE FOR DETERMINING THAT BALDOR'S PRODUCT WILL PERFORM SUITABLY IN THE INTENDED APPLICATION.

REV. DESC: CHANGE GRDLUG CALLOUT			BALDOR
REV. LTR: E	VERSION: 05	TDR: 000001024407	
FILE: \AAA\00138\742	REVISED: 04:27:53 04/13/2017	BY: USTRTAY1	STD VERT 213–5TC TEFC M CP W/6307 BRGS, LIPPED LID, DRIP CVR
MTL: –			SH 1 of 1

07LYK370