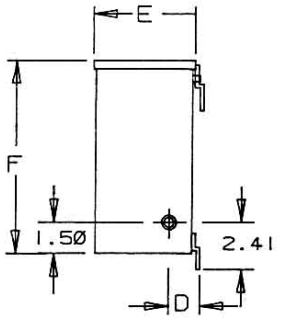

SIDE

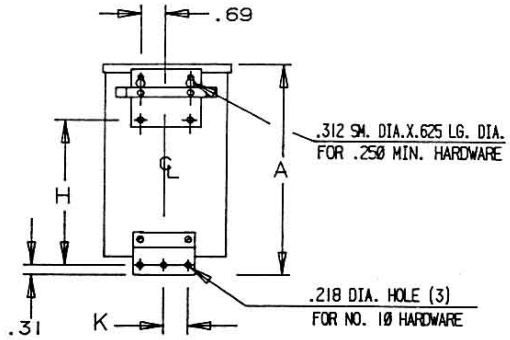

BACK (1)

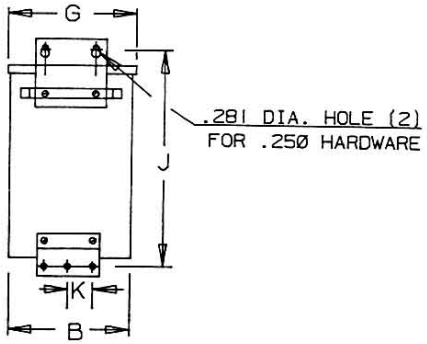

BACK (2)

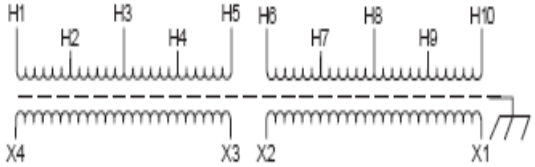

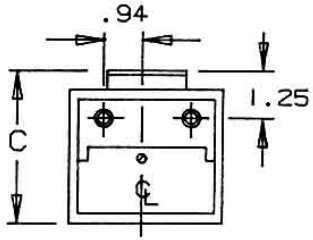

BOTTOM

Revisions

Acme Electric®

Type No.

KVA	CATALOG NUMBER	VOLTAGE		Enclosure Rating	WEIGHT	PHASE	FREQ.
		HIGH	LOW				
2.0	**TF-2-17439-S**	190/200/208/220 380/400/416/440	120/240	NEMA 3R	38 Lbs	1ϕ	50/60 Hz

TYPICAL PERFORMANCE DATA

Winding Rise	115°C
Insulation	180°C
Sound Level	45 dB

Regulation @ 100% PF	

Standards:	CE

Typical Efficiency	
Full Load Losses	
No Load Losses	

A	B	C	D	E	F	G	H	J	K
12.52	5.40	5.13	1.67	4.92	11.68	5.50	9.03	10.50	1.50

					A	PRINTS TO	CONTROL 7	