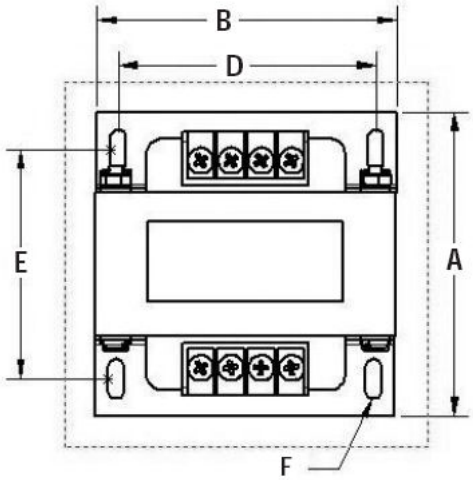

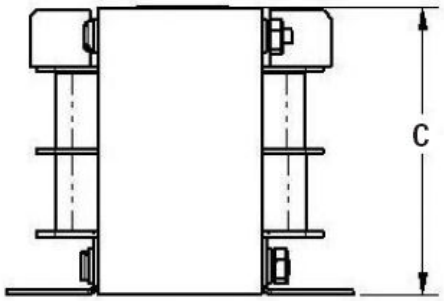

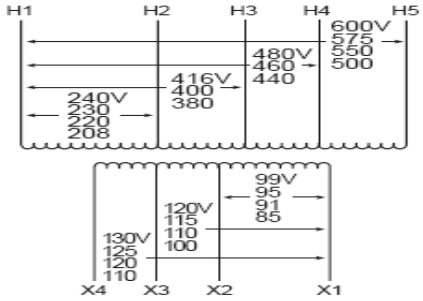

VA	CATALOG NUMBER	VOLTAGE		WIRING DIAGRAM	WEIGHT	PHASE	FREQ.
		HIGH	LOW				
350	**TB-32669**	240/416/480/600	99/120/130		22 Lbs	1ϕ	50/60 Hz

TYPICAL PERFORMANCE DATA

Winding Rise:	80°C
Insulation:	130°C
Windings:	CU

Standards:	UL/CSA

Markings:	

Typical Efficiency·	
Full Load Losses	
No Load Losses	

Industrial Control Transformer

A	B	C	D	E	F				
6.23	4.65	4.15	4.06	5.50	.22 x .50				

					A	PRINTS TO	**CONTROL 7**	

Revisions

Acme Electric®

Type No.

Date: March 26, 2010