CD0321

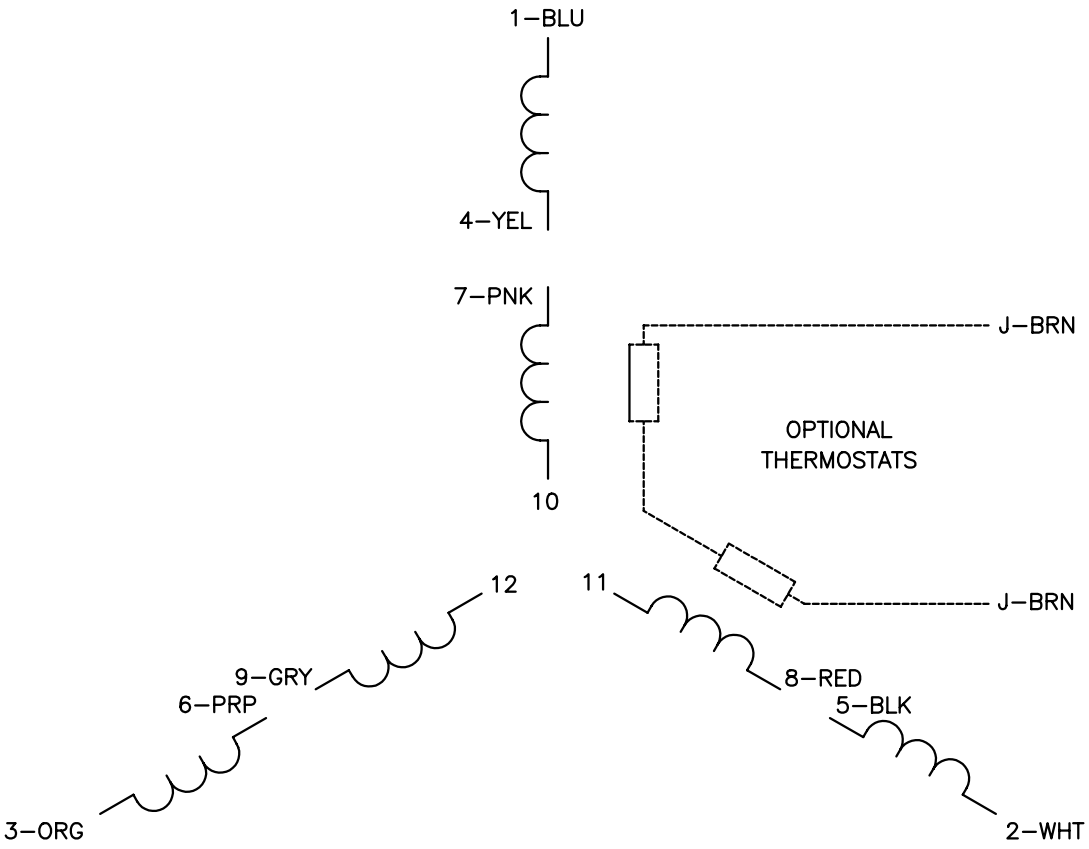

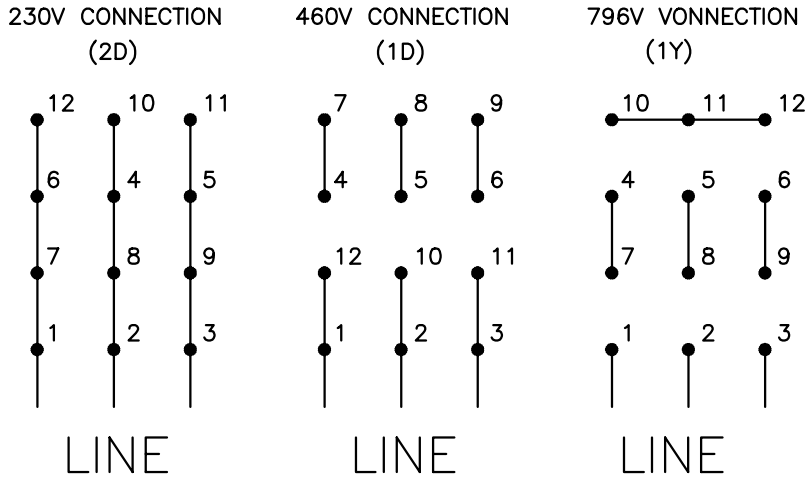

NOTES:

1. INTERCHANGE ANY TWO LINE LEADS TO REVERSE ROTATION.
2. OPTIONAL THERMOSTATS ARE PROVIDED WHEN SPECIFIED.
3. ACTUAL NUMBER OF INTERNAL PARALLEL CIRCUITS MAY BE A MULTIPLE OF THOSE SHOWN ABOVE.
4. LEAD COLORS ARE OPTIONAL. LEADS MUST ALWAYS BE MARKED AS SHOWN.

REV. DESC: REVISE TO SHOW OPTIONAL COLORS			
REV. LTR: C	BY: JLP	REVISED: 01/21/99 3:17	TDR: 0171435
CD0321		FILE: AAA00008378	MDL: –
		MTL: –	

BALDOR ELECTRIC Co.

3PH, TV, 12 LEADS, 2D/1D/1Y, OIL FIELD PUMPERS

CD0321