34LYA061

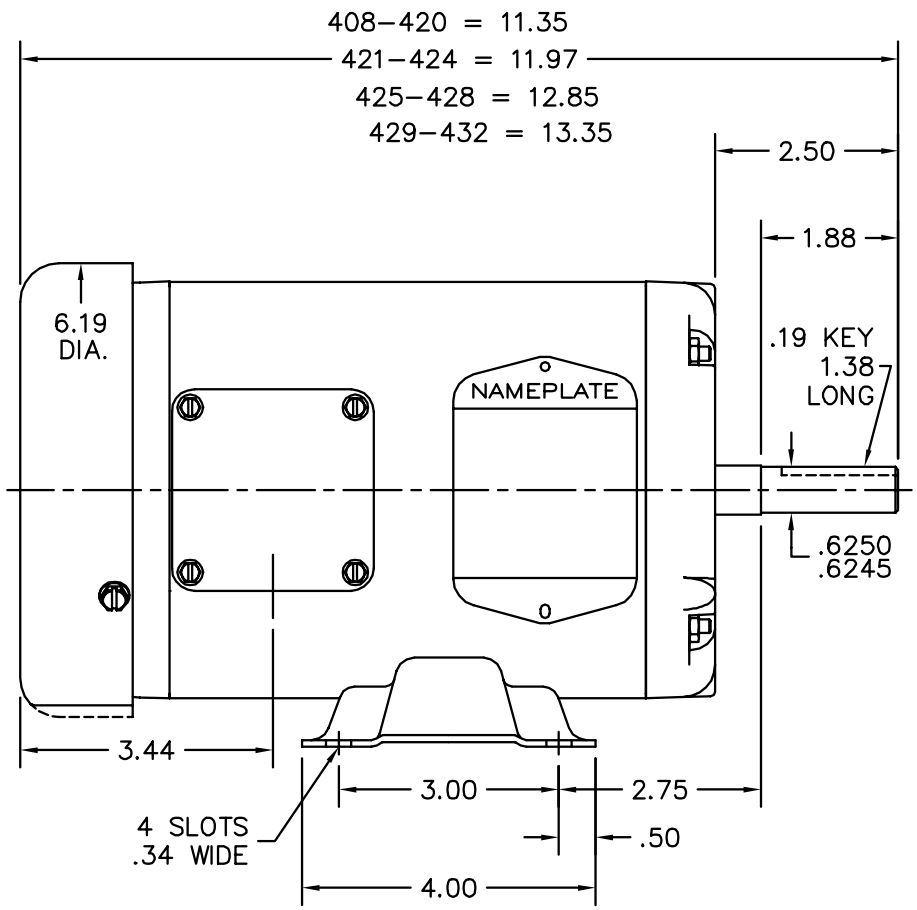


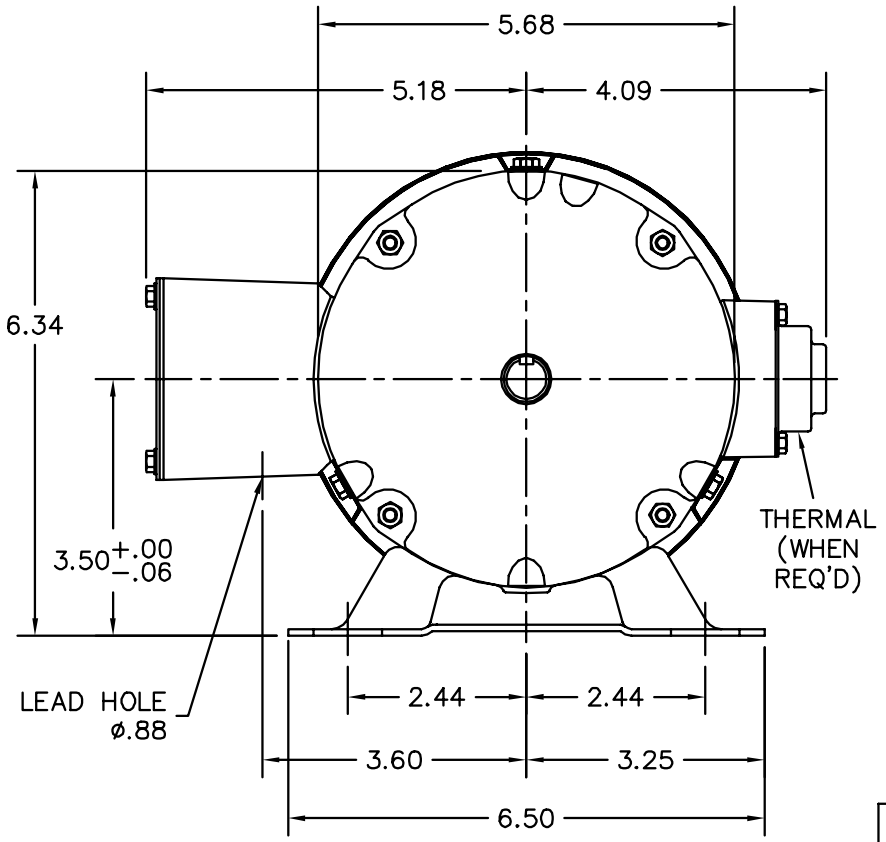


CUSTOMER IS RESPONSIBLE FOR DETERMINING THAT BALDOR'S PRODUCT WILL PERFORM SUITABLY IN THE INTENDED APPLICATION.

| | | |
|---|---|---|
| REV. DESC: SECTION VIEW: REMOVE EXTANEOUS PTS FROM LAYOUT | | |
| REV. LTR: K | VERSION: 03 | TDR: 000001047233 |
| FILE: \AAA\00000\561 | REVISED: 08:12:58 10/17/2017 | BY: ENBENBO |
| MTL: – | | |

BALDOR

STD HORZ 34M NEMA 56 TEFC

SH 1 of 1

34LYA061