35LYA011

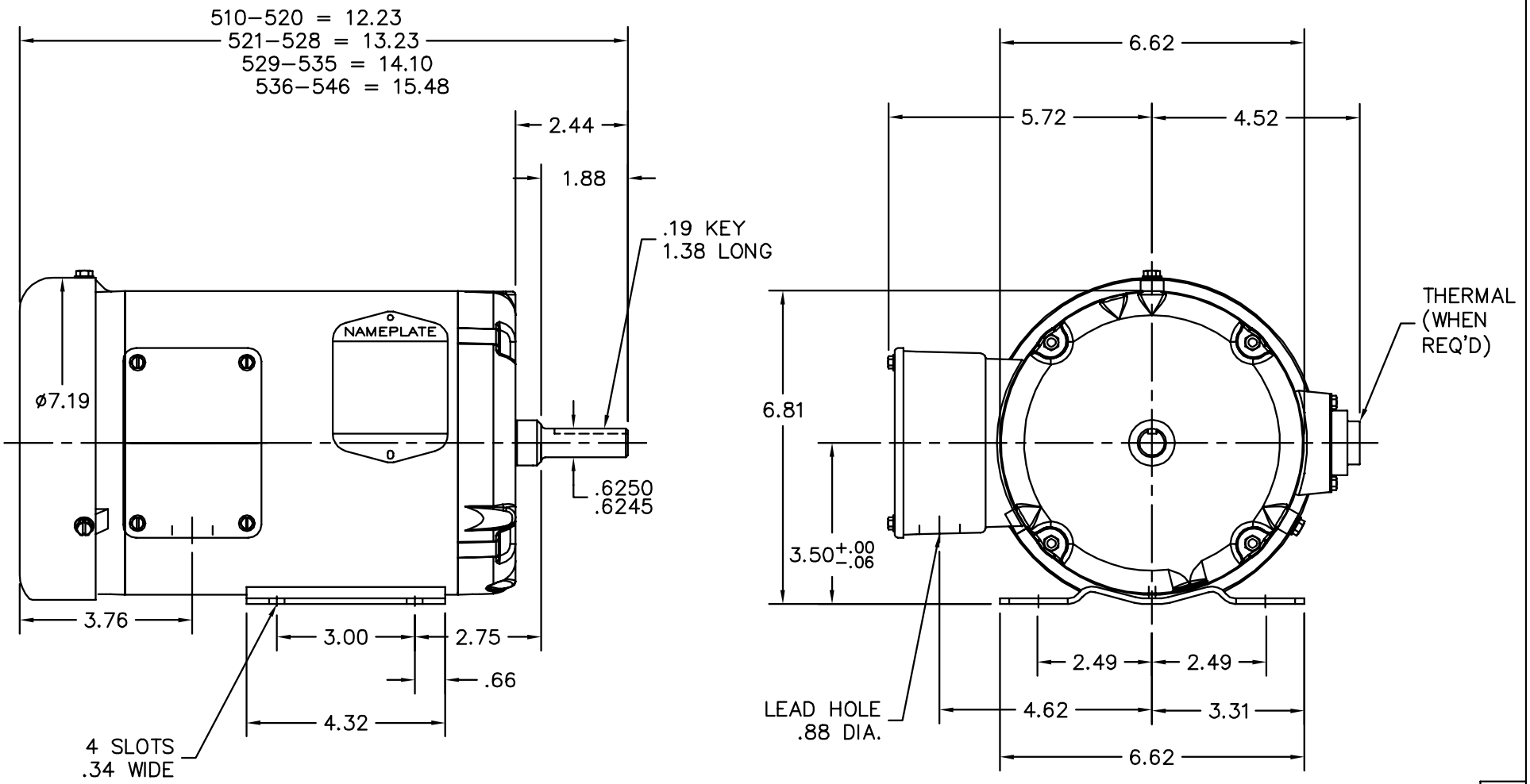

CUSTOMER IS RESPONSIBLE FOR DETERMINING THAT BALDOR'S PRODUCT WILL PERFORM SUITABLY IN THE INTENDED APPLICATION.

REV. DESC: REPLACE ENDPLATES		
REV. LTR: R	VERSION: 07	TDR: 000001063223
FILE: \AAA\00002\446	REVISED: 02:16:22 03/07/2018	BY: USJOBUR22
MTL: –		

BALDOR

STD HORZ 56 TEFC 35M

SH 1 of 1

35LYA011