37LYB001

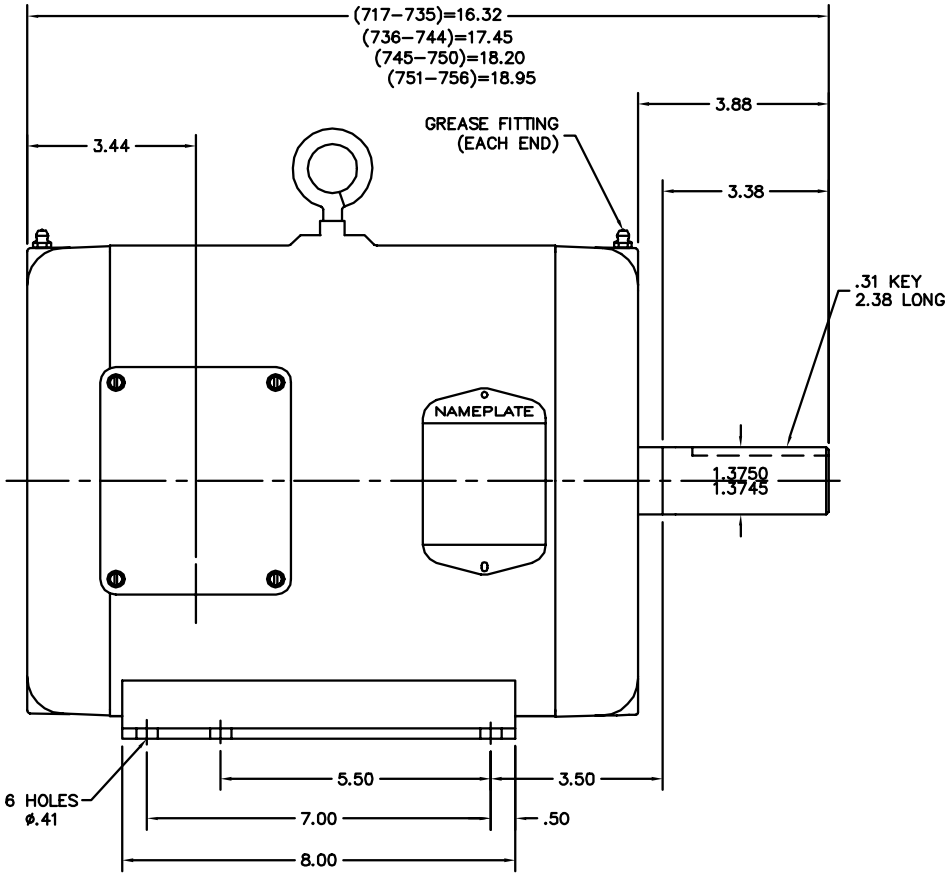


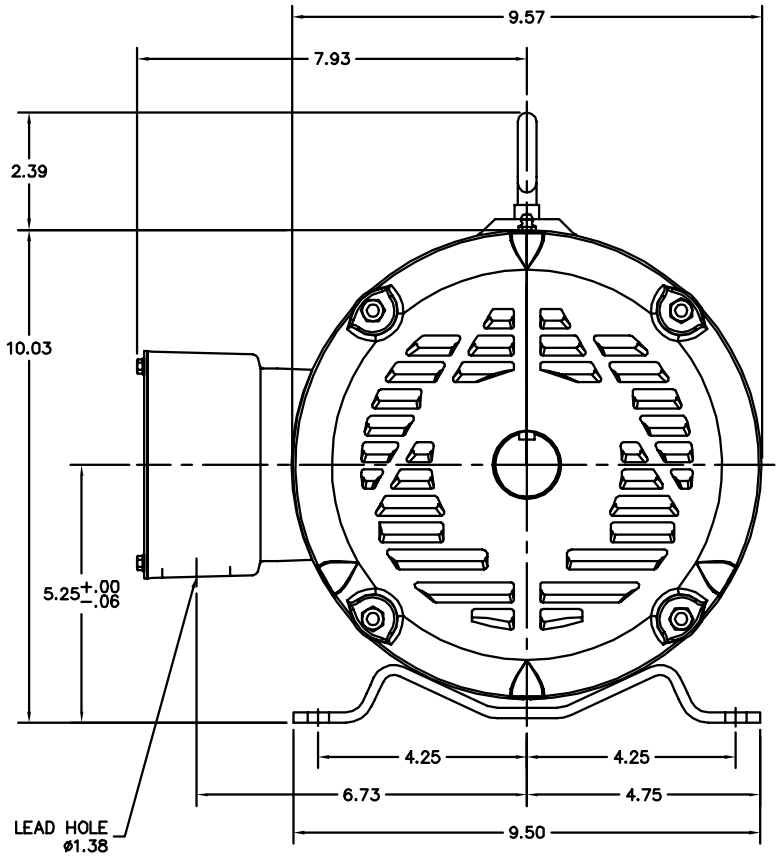


CUSTOMER IS RESPONSIBLE FOR DETERMINING THAT BALDOR'S PRODUCT WILL PERFORM SUITABLY IN THE INTENDED APPLICATION.

| | | | |
|---|---|---|---|
| REV. DESC: REPLACE ENDPLATES | | | BALDOR |
| REV. LTR: M | VERSION: 02 | TDR: 000001018975 | |
| FILE: \AAA\00002\757 | REVISED: 08:44:50 03/07/2017 | BY: USZAHAR | STANDARD HORZ NEMA 213T–215T OPEN 37M |
| MTL: – | | | SH 1 of 1 |

37LYB001