XG2D1ES33B

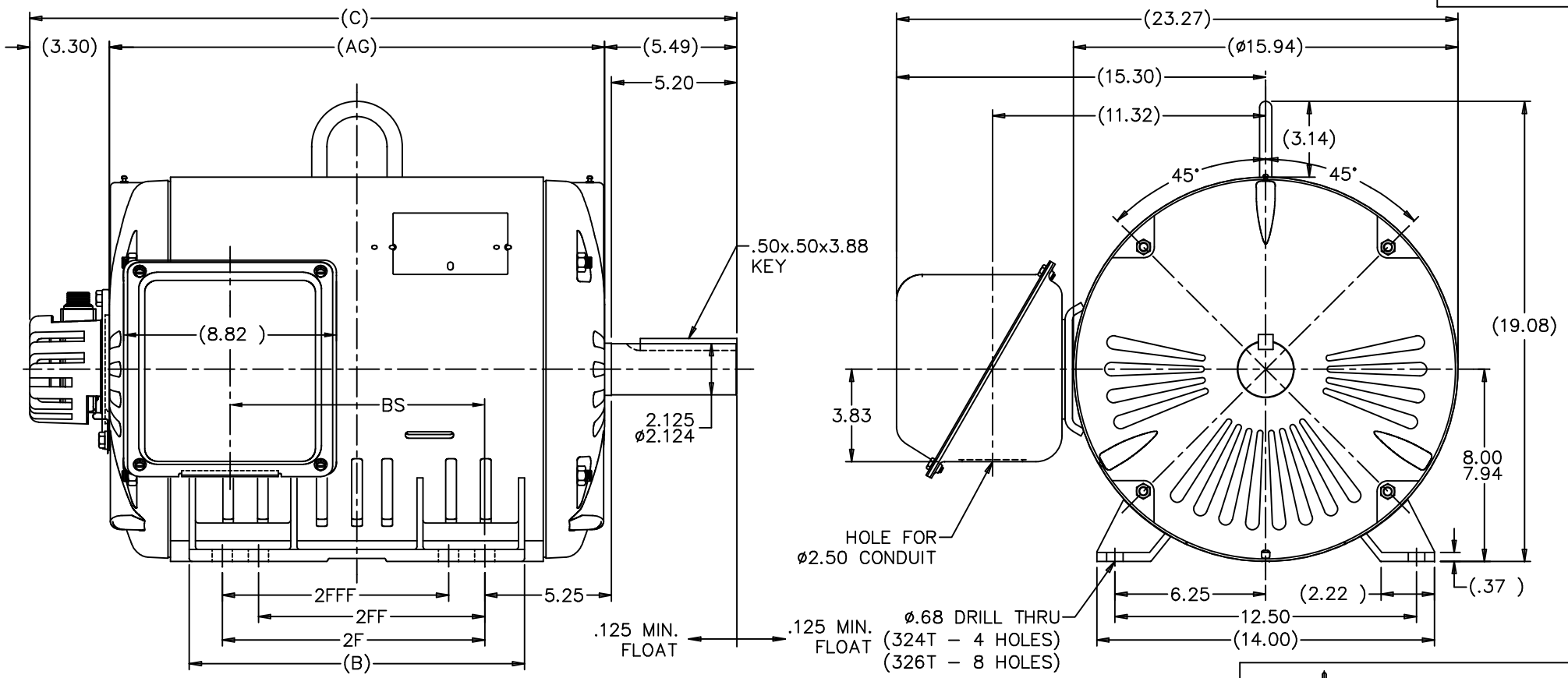

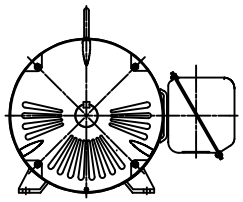

F2 VIEW

NOTES:
1. CONDUIT BOX CAN BE ROTATED IN 90° STEPS.
2. NAMEPLATES TO BE READ FROM CONDUIT BOX SIDE OF MOTOR.

DASH	FRAME	C	AG	B	2F	2FF	2FFF	BS
1507	324T	29.30	20.51	13.52	10.50	X	X	10.51
1657	326T	30.80	22.01	15.02	12.00	10.50	10.50	12.01

NO.	REVISION	BY & DATE	CHK
1	NEW DRAWING MU41735	CTO 06/10/02	HNH

TOLERANCES UNLESS SPECIFIED

DEC.	INCHES
.X	±.1
.XX	±.03
.XXX	±.005
.XXXX	±.0005
ANG	±7'30"

Lincoln MOTORS

TITLE OUTLINE
VVVF ELEVATOR HOIST MOTOR 320 ODP UE

MAT'L.
FINISH
CAD FILE xg2d1es33b
RFP
DIST BY

DRAWN CTO 06-10-2002
CHK ML 06-10-2002
APPD HNH 06-10-2002
SCALE 1=4
REF
FMF
PREV

SIZE B
DRAWING NO. XG2D1ES33B
REV. 1

THIS DRAWING IN DESIGN AND DETAIL IS OUR PROPERTY AND MUST NOT BE USED EXCEPT IN CONNECTION WITH OUR WORK ALL RIGHTS OF DESIGN AND INVENTION ARE RESERVED
THIS IS AN ELECTRONICALLY GENERATED DOCUMENT – DO NOT SCALE THIS PRINT