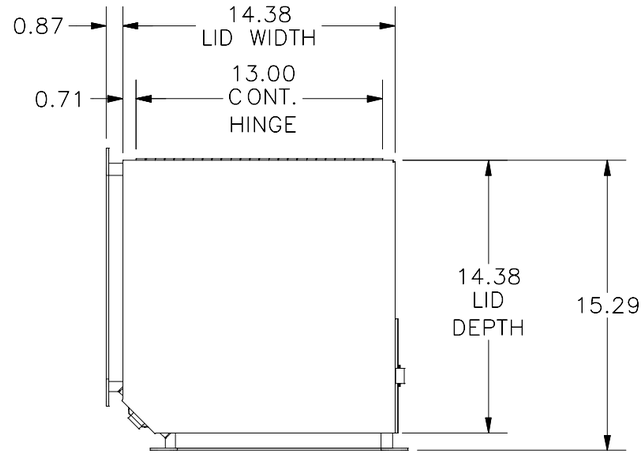

TOP VIEW

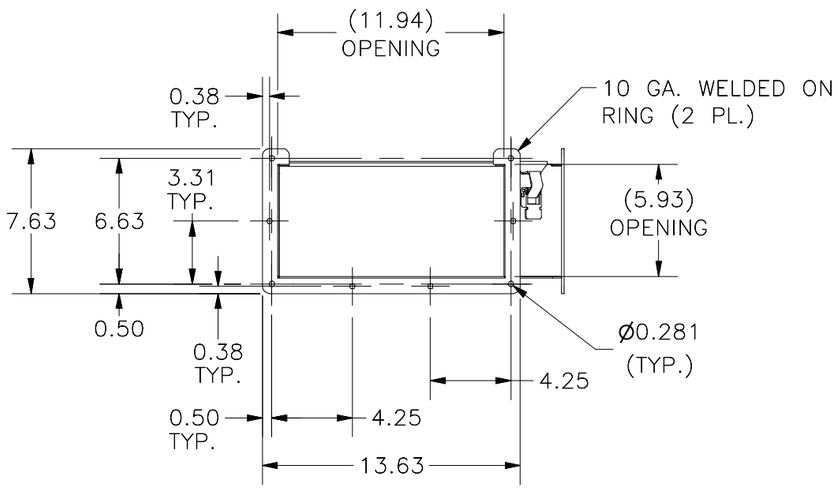

FRONT VIEW

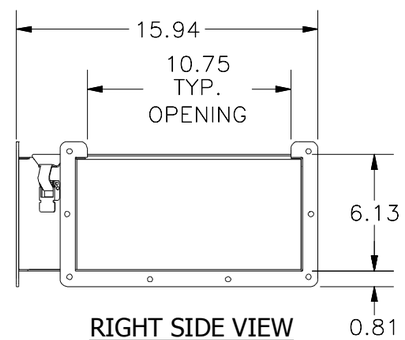

RIGHT SIDE VIEW

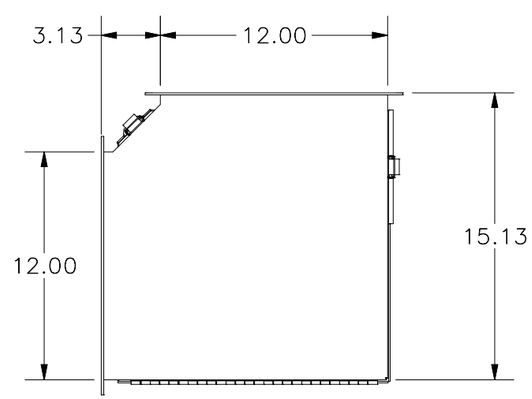

BOTTOM VIEW

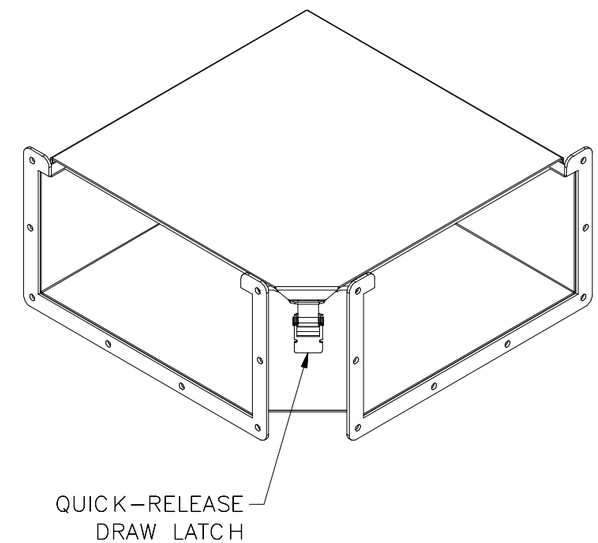

PART#: LJWL90126A
(DATA SUBJECT TO CHANGE WITHOUT NOTICE)

THIS DRAWING IS PROPERTY OF HUBBELL INC. WIEGMANN
ALL INFORMATION IS PROPRIETARY AND NOT TO BE DUPLICATED