34LYC051

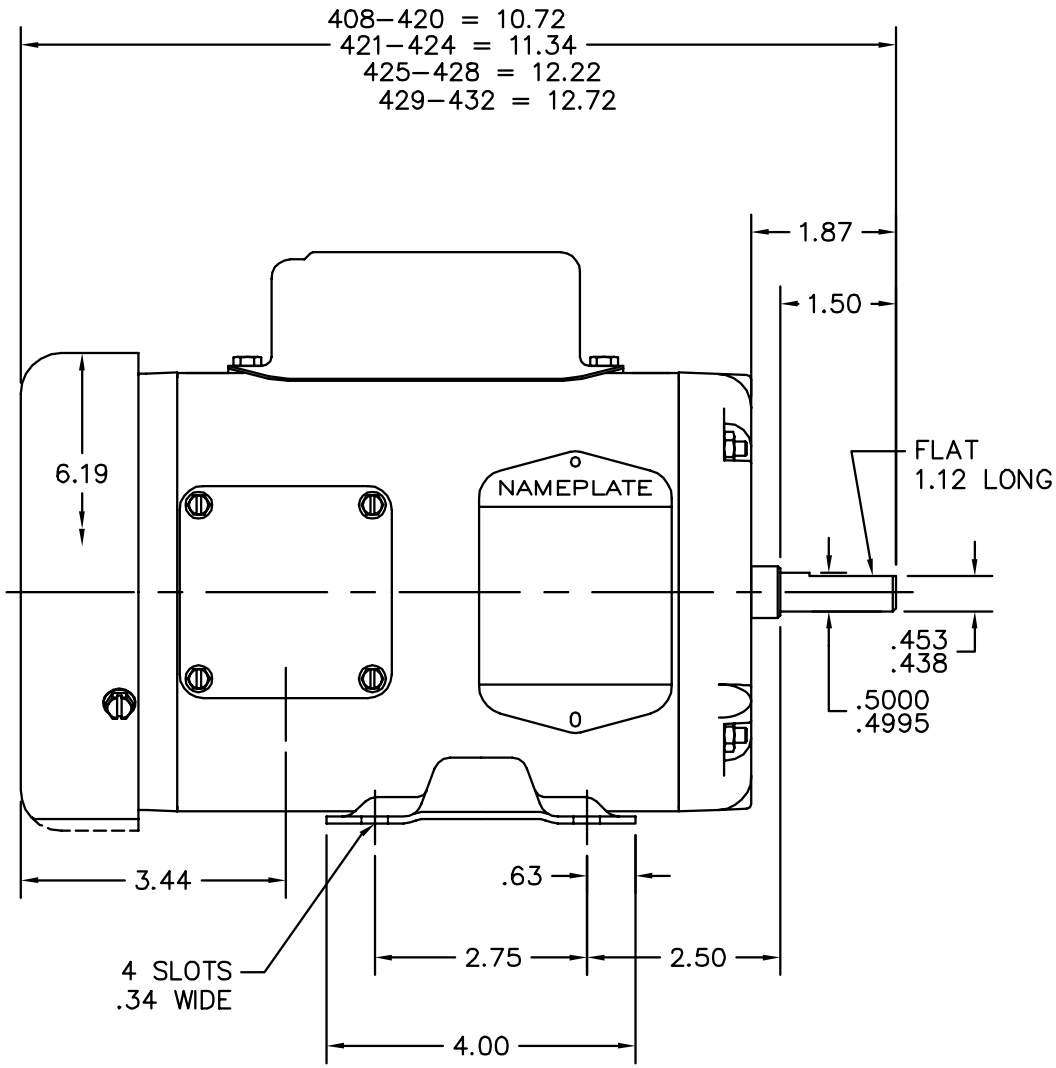

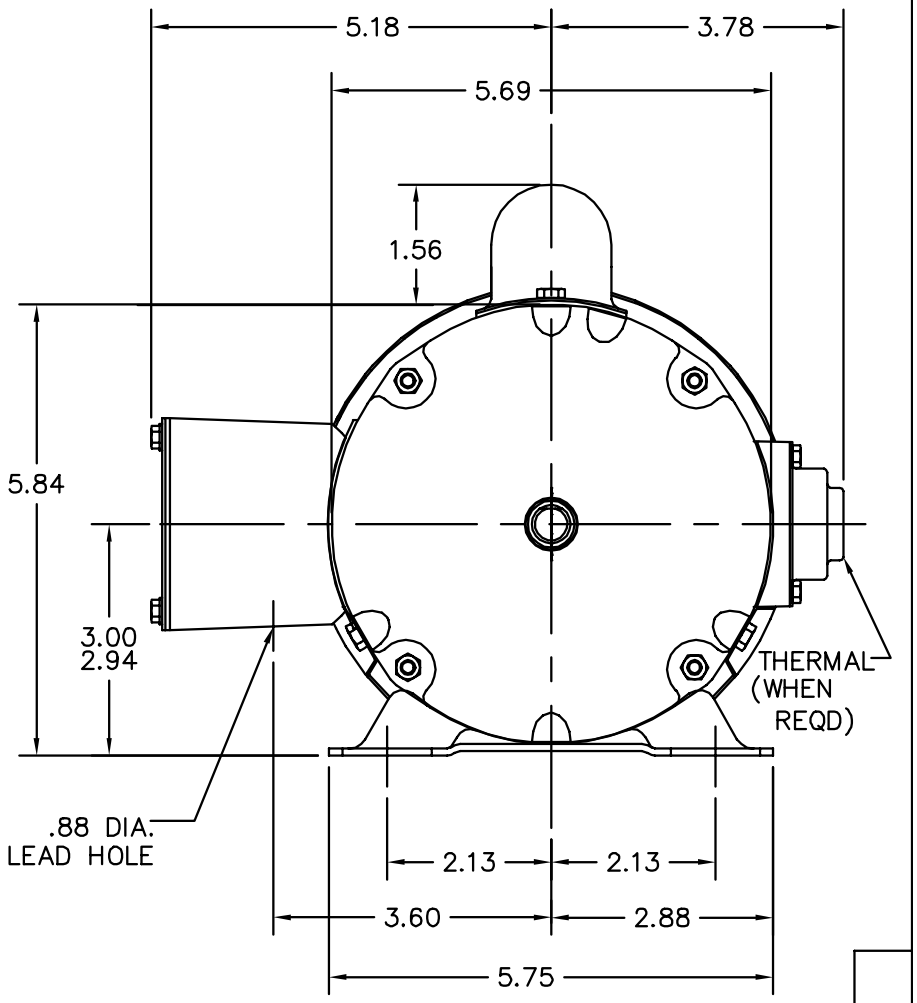

34LYC051

CUSTOMER IS RESPONSIBLE FOR DETERMINING THAT BALDOR'S PRODUCT WILL PERFORM SUITABLY IN THE INTENDED APPLICATION.

REV. DESC: UPDATE OVERALL LENGTHS			BALDOR
REV. LTR: L	VERSION: 04	TDR: 000000767401	
FILE: \AAA\00025\908		REVISED: 09:00:29 10/02/2012	STD HORZ MODEL 34L NEMA 48 TEFC
MTL: –		BY: ENBUCF0	SH 1 of 1