BALDOR
A MEMBER OF THE ABB GROUP

BALDOR • RELIANCE

Product Information Packet

L1317-50

2HP,2850RPM,1PH,50HZ,56,3532L,OPEN,F1

Copyright © All product information within this document is subject to Baldor Electric Company copyright © protection, unless otherwise noted.

Part Detail

Revision:	P	**Status:**	PRD/A	**Change #:**		**Proprietary:**	No
Type:	AC	**Prod. Type:**	3532L	**Elec. Spec:**	35WGY999	**CD Diagram:**	CD0001
Enclosure:	OPEN	**Mfg Plant:**		**Mech. Spec:**	35T947	**Layout:**	35LYT947
Frame:	56	**Mounting:**	F1	**Poles:**	02	**Created Date:**	06-22-2007
Base:	RG	**Rotation:**	R	**Insulation:**	B	**Eff. Date:**	02-26-2013
Leads:	4#14 A PH,2#18 B PH					**Replaced By:**	
Literature:		**Elec. Diagram:**					

BALDOR
A MEMBER OF THE ABB GROUP

Nameplate NP1372L							
CAT.NO.	L1317-50						
SPEC.	35T947Y999G1						
HP	2						
VOLTS	110/220						
AMP	24/12						
RPM	2850						
FRAME	56	HZ	50	PH	1		
SER.F.	1.15	CODE	F	DES	L	CL	B
NEMA-NOM-EFF	70	PF	84				
RATING	40C AMB-CONT						
CC		USABLE AT 208V					
DE	6205	ODE	6203				
ENCL	OPEN	SN					
	IP23						

BALDOR A MEMBER OF THE ABB GROUP

Parts List

Part Number	Description	Quantity
SA109233	SA 35T947Y999G1	1.000 EA
RA100728	RA 35T947Y999G1	1.000 EA
EC1645A06SP	ELEC CAP, 645-774 MFD, 125V, 2.06D X 4.	1.000 EA
NS2512A01	INSULATOR, CONDUIT BOX X	1.000 EA
35CB3007	35 CB CASTING W/.88 DIA. LEAD HOLE	1.000 EA
51XB1016A07	10-16 X 7/16 HXWSSLD SERTYB	2.000 EA
11XW1032G06	10-32 X .38, TAPTITE II, HEX WSHR SLTD U	1.000 EA
35EP3201A03	STD FR EP OPEN-203BRG-35L OR M FRAME--LE	1.000 EA
51XW0832A07	8-32 X .44, TAPTITE II, HEX WSHR SLTD SE	2.000 EA
NS2501A01	INSULATOR, CAPACITOR	1.000 EA
51XB1016A05	10-16X5/16HX WA SL SR TYB (F/S)	2.000 EA
HW5100A03SP	WAVY WASHER (W1543-017)	1.000 EA
35EP3200A02	STD PU ENDPLATE-OPEN-205 BRG	1.000 EA
XY1032A02	10-32 HEX NUT DIRECTIONAL SERRATION	4.000 EA
35CB4521	35 LIPPED CB LID (GALV & PHOSPH)	1.000 EA
51XW0832A07	8-32 X .44, TAPTITE II, HEX WSHR SLTD SE	4.000 EA
HW2501D13SP	KEY, 3/16 SQ X 1.375	1.000 EA
HA7000A04	KEY RETAINER 0.625 DIA SHAFTS	1.000 EA
85XU0407S04	4X1/4 U DRIVE PIN STAINLESS	2.000 EA
SP1006A01	TERM. BOARD, MODE 35 SW X H-23655	1.000 EA
WD1000A15	3-520132-2 AMP FLAG (4M/RL NON-CANC/NON-	2.000 EA
MJ1000A75	GREASE, POLYREX EM EXXON (USe 4824-15A)	0.050 LB
MG1000G27	MED CHARCOAL METALLIC GREY	0.017 GA
SP5055A67	MODEL 35 TYPE L STATIONARY SWITCH	1.000 EA

BALDOR
A MEMBER OF THE ABB GROUP

Parts List (continued)

Part Number	Description	Quantity
35CB4802A02SP	CAPACITOR COVER, STAMPED X W/AUTOPHORET	1.000 EA
HA3100A22	THRUBOLT 10-32 X 10.125	4.000 EA
MN416A01	TAG-INSTAL-MAINT no wire (1200/bx) 10/13	1.000 EA
LB1119N	WARNING LABEL	1.000 EA
LB1125C01	STD (STOCK) CARTON LABEL BALDOR WITH FLA	1.000 EA
LC0001	CONN LABEL TYPE L, 6 LEAD, DUAL VOLTS, R	1.000 EA
NP1372L	ALUM UL CSA CE CC	1.000 EA
35PA1066	PACKING GROUP COMBINED PRINT	1.000 EA

BALDOR
A MEMBER OF THE ABB GROUP

Accessories

Part Number	Description	Multiplier
35-8764	C FACE KIT	A8
35EP1604A01SP	D-FLANGE KIT	A8

BALDOR
A MEMBER OF THE ABB GROUP

No performance data has been assigned to this product.

BALDOR
A MEMBER OF THE ABB GROUP

35LYT947

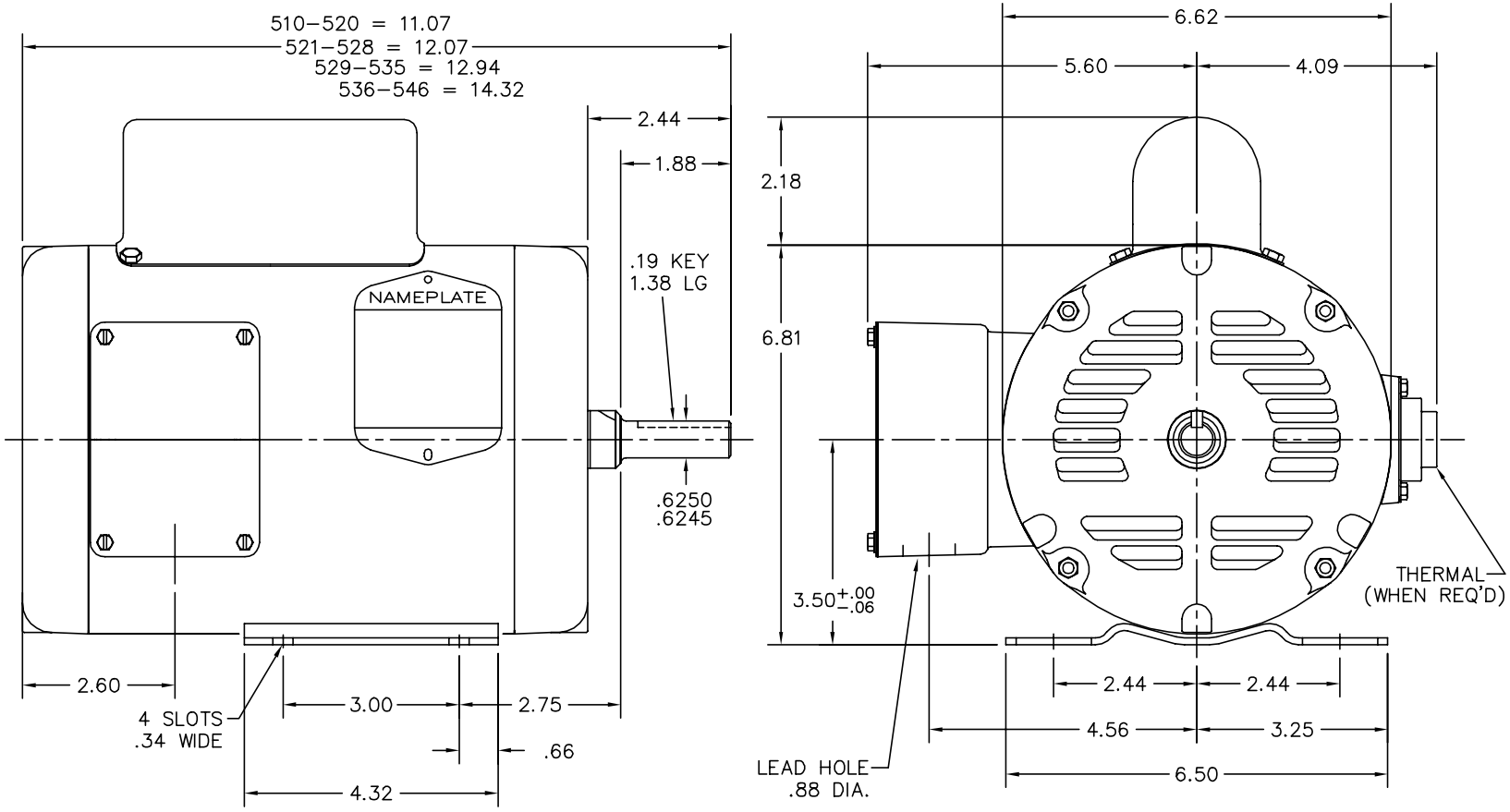

CUSTOMER IS RESPONSIBLE FOR DETERMINING THAT MOTOR PERFORMANCE IS SUITABLE IN THE APPLICATION.

REV. DESC: NEW				BALDOR ELECTRIC Co.
REV. LTR: –	BY: KCT	REVISED: 12:27:03 11/14/2003	TDR: 317575	
35LYT947		FILE: AAA00111245	REF: 35LYT947	STD HORZ 56 OPEN MODEL 35L, 2 POLE "W" BASE (35BA4010)
		MTL: –		

35LYT947

BALDOR A MEMBER OF THE ABB GROUP

CD0001

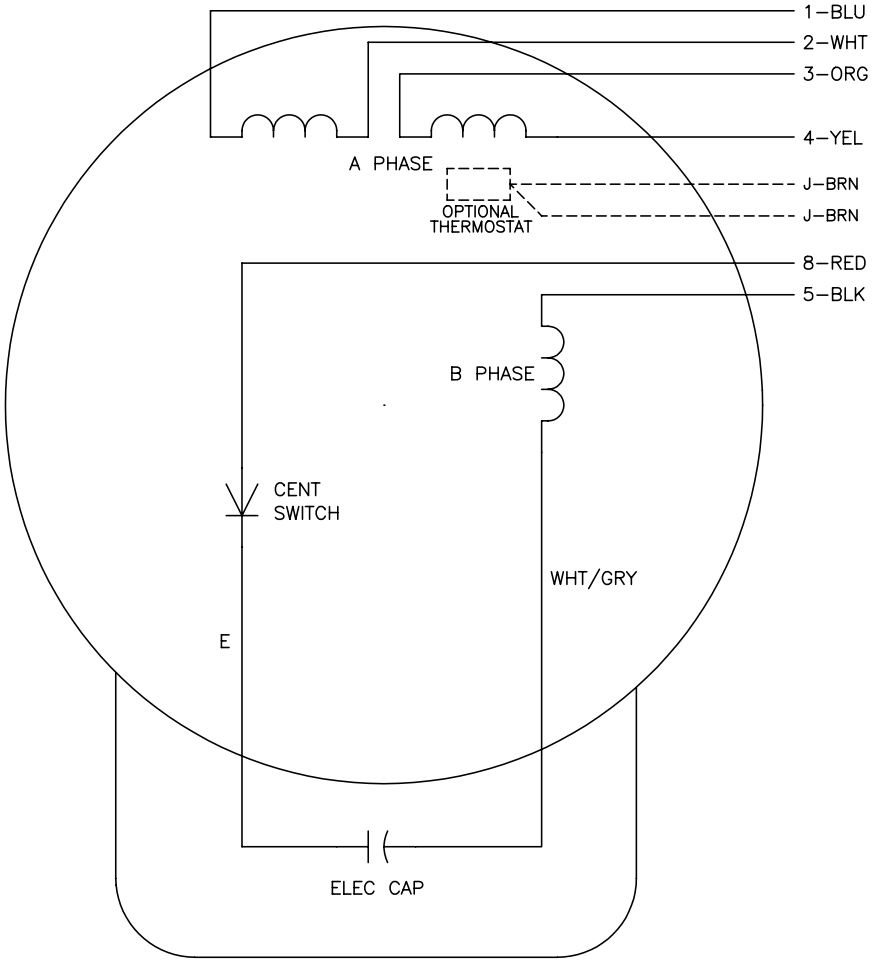

	LINE A	LINE B	JOIN
HIGH STD	1	4,5	2,3,8
HIGH OPP	1	4,8	2,3,5
LOW STD	1,3,8	2,4,5	–
LOW OPP	1,3,5	2,4,8	–

NOTES:

1. STANDARD ROTATION IS CCW FACING END OPPOSITE SHAFT EXTENSION.
2. OPTIONAL THERMOSTAT IS PROVIDED WHEN SPECIFIED.
3. MULTIPLE CAPACITORS ARE CONNECTED IN PARALLEL UNLESS OTHERWISE SPECIFIED.
4. LEAD COLORS ARE OPTIONAL. LEADS MUST ALWAYS BE NUMBERED AS SHOWN.

REV. DESC: REVISE TO SHOW OPTIONAL COLORS			
REV. LTR: D	BY: JLP	REVISED: 04/08/99 1:16	TDR: 0178636
CD0001		FILE: AAA00007405	MDL: –
		MTL: –	

BALDOR ELECTRIC Co.

TYPE L, DV, REV, 6 LEADS

CD0001

BALDOR A MEMBER OF THE ABB GROUP