36LYH017

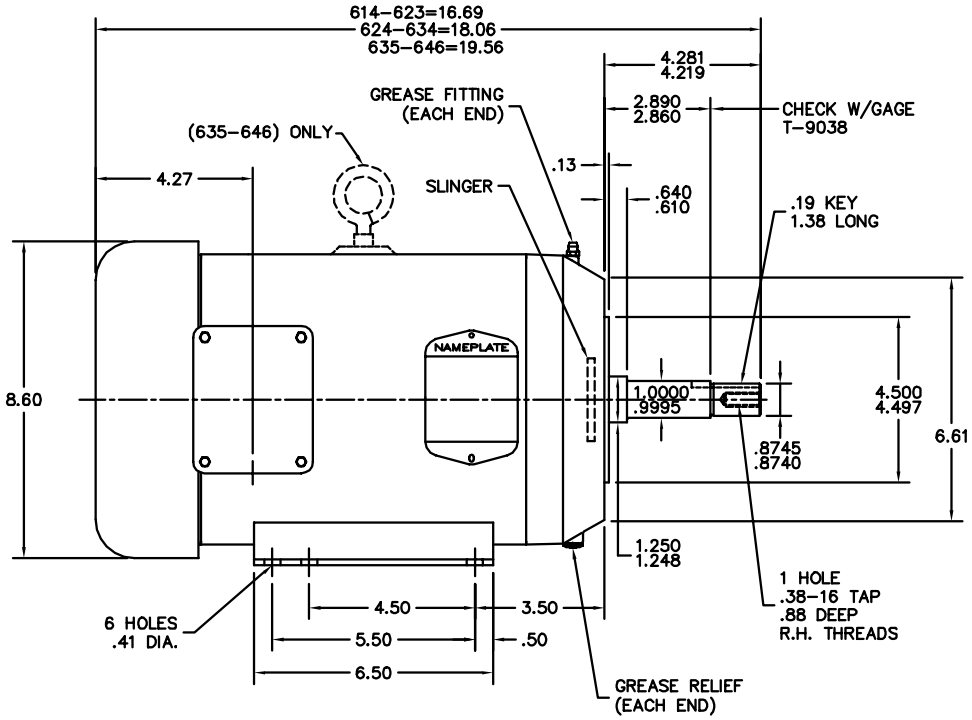

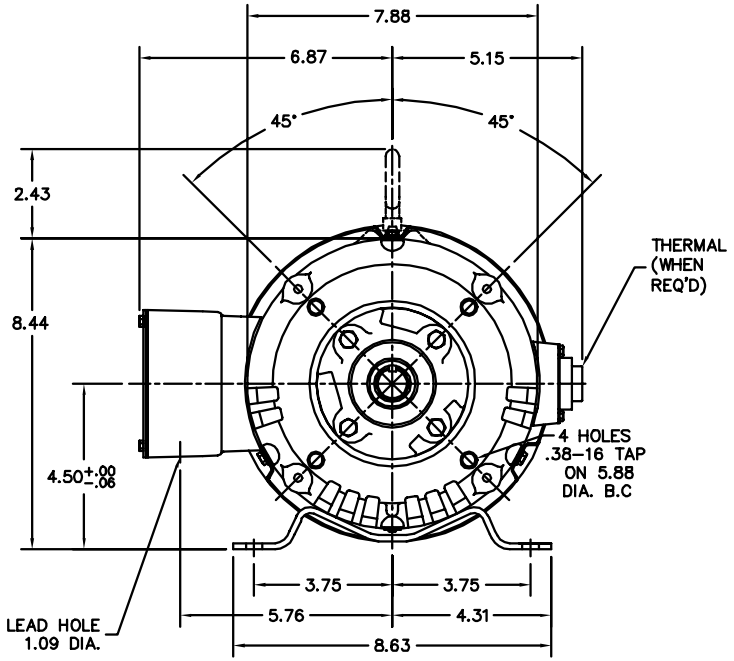

CUSTOMER IS RESPONSIBLE FOR DETERMINING THAT MOTOR PERFORMANCE IS SUITABLE IN THE APPLICATION.

REV. DESC: ADDED KOBX LEAD HOLE DIM				BALDOR ELECTRIC Co.
REV. LTR: M	BY: RMP	REVISED: 07:25:39 09/09/2004	TDR: 342770	
FILE: AAA00004174			REF: 36LYH017	STD HORZ 182–4JM TEFC 36M
MTL: –				

36LYH017