35LYN256

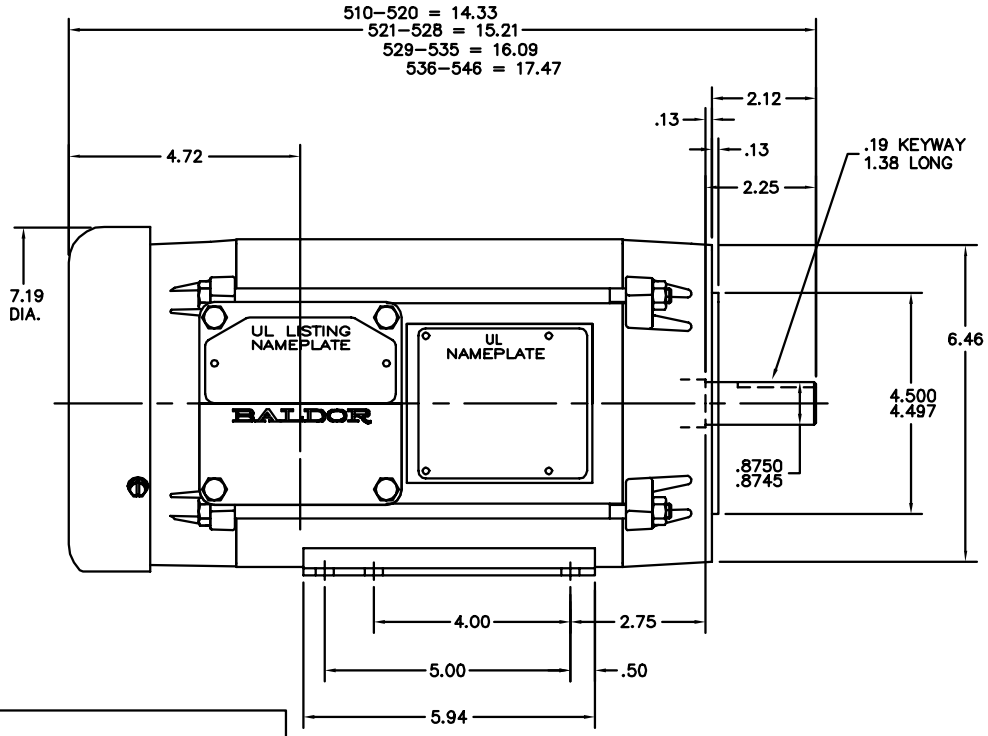

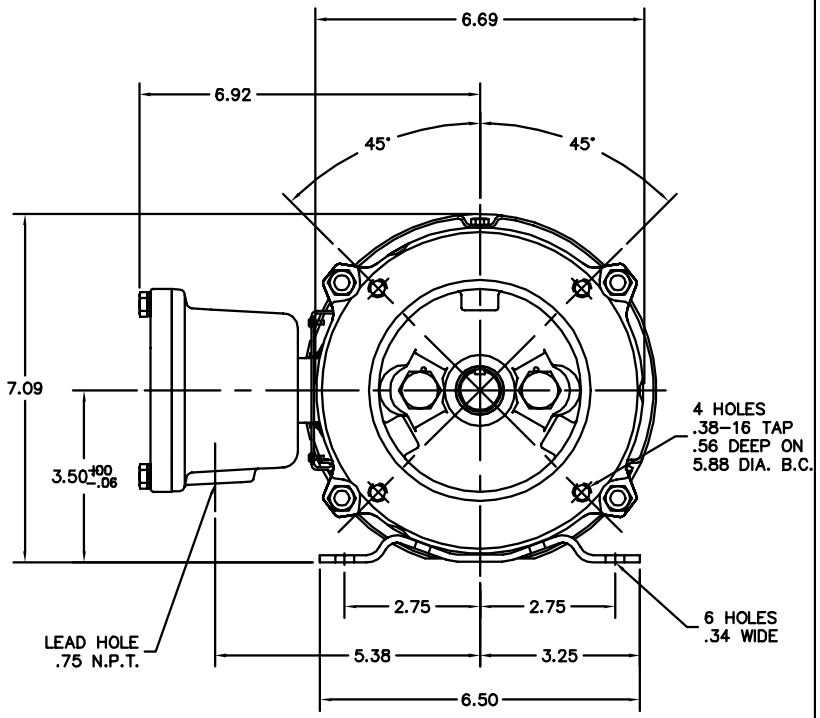

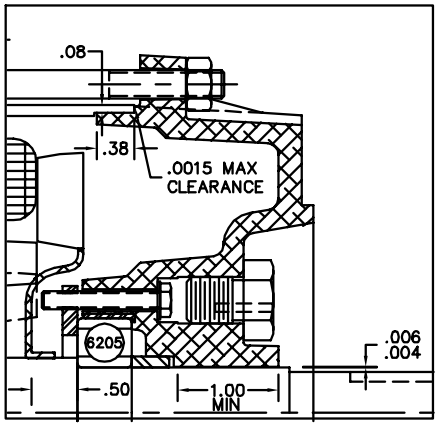

CUSTOMER IS RESPONSIBLE FOR DETERMINING THAT BALDOR'S PRODUCT WILL PERFORM SUITABLY IN THE INTENDED APPLICATION.

REV. DESC: UPDATED FAN HOUSING GRAPHICS			BALDOR
REV. LTR: C	VERSION: 02	TDR: 000000743844	
FILE: \AAA\00029\127	REVISED: 08:59:00 04/24/2012	BY: ENBRAMO	HORZ 143–5TC X35M XPFC DUAL CLASS, INVERTER DUTY
MTL: –			SH 1 of 1

35LYN256