WORLDWIDE ELECTRIC CORPORATION
HdR SERIES PROGRAM - WORM GEAR SPEED REDUCERS
FLANGE INPUT - HOLLOW BORE OUTPUT - DIMENSIONS

MODEL # HdRF325-*-H-184TC

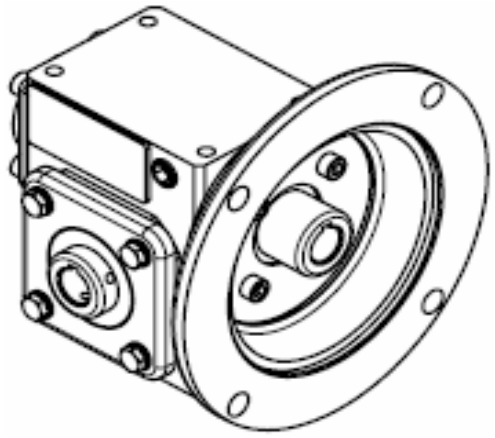

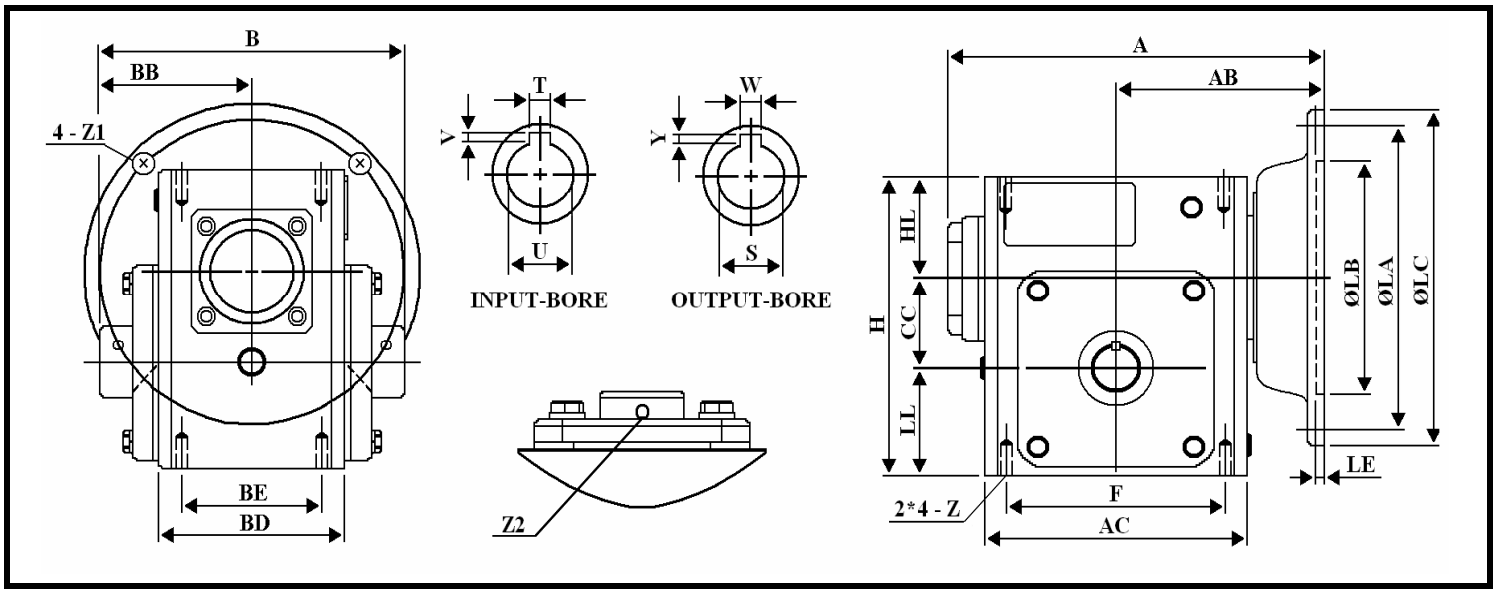

DIMENSIONS - Inches

Size	A	AB	AC	B	BB	BD	BE	CC	F	H	HL	LL	Z2	Z
325	12.6	7.244	9.016	8.76	4.38	5.748	4	3.25	7.5	9.375	2.625	3.5	5/16-24 UNF*3/8	7/16-24 UNC

	INPUT BORE		OUTPUT BORE		FLANGE					NEMA FRAME	OIL (OZ.)
Size	U	T*V	S	W*Y	LA	LB	LC	LE	Z1		
325	1.125	1/4 * 1/8	1.937	1/2 * 3/16	7.25	8.5	9	0.2	0.551	184TC	73.75

* Suitable For Any Ratio

WORLDWIDE Electric Corp