M-9739 | 3

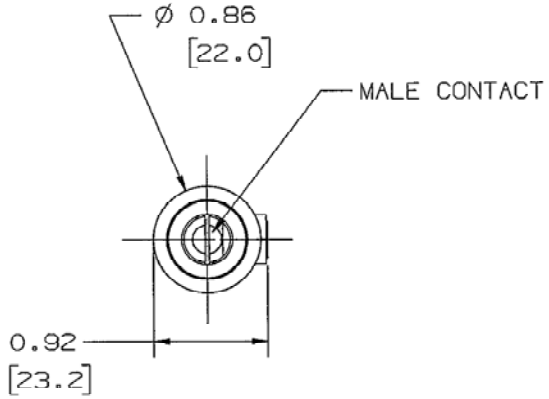

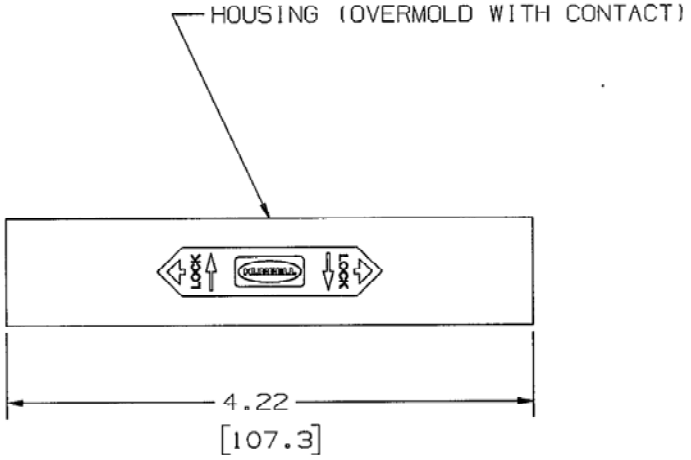

NOTES:
1. DIMENSIONS ARE INCHES ±.02
[mm] ±.5
2. RATING: 600VAC/250VDC 150 AMP
3. UL/c-UL ENCLOSURE TYPES 3R, 4X, 12.

HUBBELL CAT. NO.	COLOR
HBL15DMGN	GREEN
HBL15DMW	WHITE

LIST OF PARTS		
DESCRIPTION	MATERIAL	FINISH
HOUSING	TPE	SEE TABLE
MALE CONTACT	BRASS	

SYM	REVISIONS	APP	DATE
3	CHANGE CATALOG NO.'S FROM HBLDMXX15 TO HBL15DMXXX PER DCN 19979 CAC	CC CAC	7/23/13
2	REMOVE (5) COLORS PER DCN 19061 CAC	CC	8/28/12
1	RELEASE FOR PRODUCTION PER DCN#12733 PJT	TB	1/10/06

THE DESIGN AND DIMENSIONS OF THE PRODUCT SHOWN ON THIS DRAWING ARE SUBJECT TO CHANGE WITHOUT NOTICE

TITLE 150A SINGLE POLE DOUBLE MALE

TOLERANCES UNLESS OTHERWISE SPECIFIED
FRACTIONS ± 1/64
DECIMALS ± .005
ANGLES ± 2°

WIRING DEVICE-KELLEMS
HUBBELL INCORPORATED
BRIDGEPORT, CT

DR. BY PJT | APP. BY TB
TR. BY | SCALE 1 : 1
CHK'D BY | DATE 1/10/08

DIMENSION SHEET FOR CAT. NO. SEE TABLE

REPAIRABLE ☐ NON-REPAIRABLE ☒

B

M-9739

(1)

CODE 74545