H5075-BU

8-12-08

CUSTOMER DWG

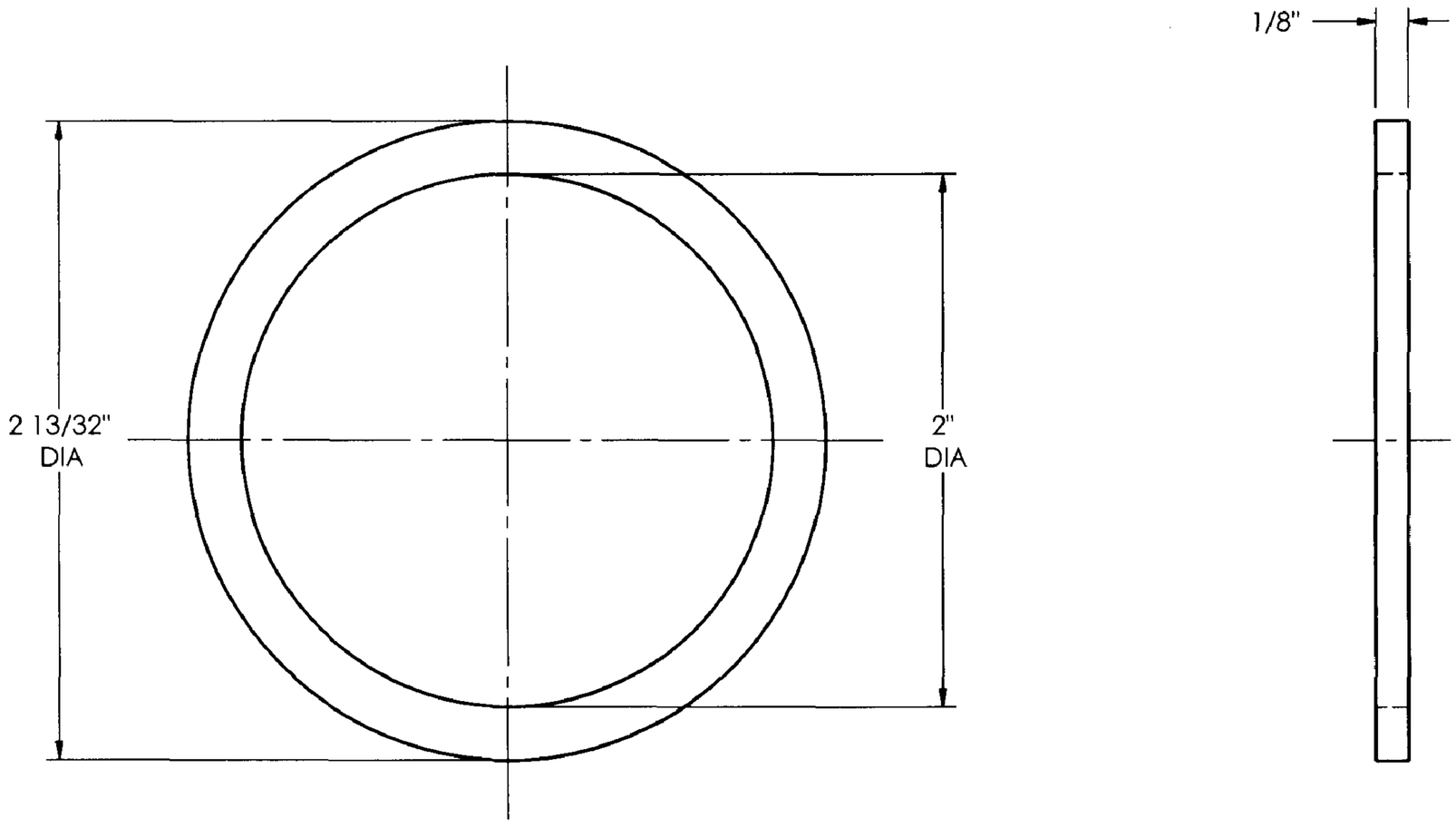

CUSTOMER DWG

DIXON

The Right Connection™

AGREEMENT TO MAINTAIN CONFIDENTIALITY

This drawing is owned by Dixon Valve & Coupling Co. and shall be returned upon demand. It is loaned on condition that it shall not be copied or reproduced or submitted to others without the owners consent. In accepting it subject to this condition the recipient further agrees that this drawing or any design detail or concept disclosed herein shall not be used in any way detrimental to or in competition with the owner. If the recipent does not agree to the terms of this agreement they shall return this drawing immediately.

DIXON VALVE & COUPLING CO.
U. S. A.

TITLE: 2" WASHER FOR FEMALE FUEL OIL COUPLING HOLEDALL PETROLEUM FITTING		
DRWN BY: DPT 11/14/06	CHECKED BY:	APPROVAL: AE 12-04-06
MAT'L: BUNA	H5075-BU	