CD1899

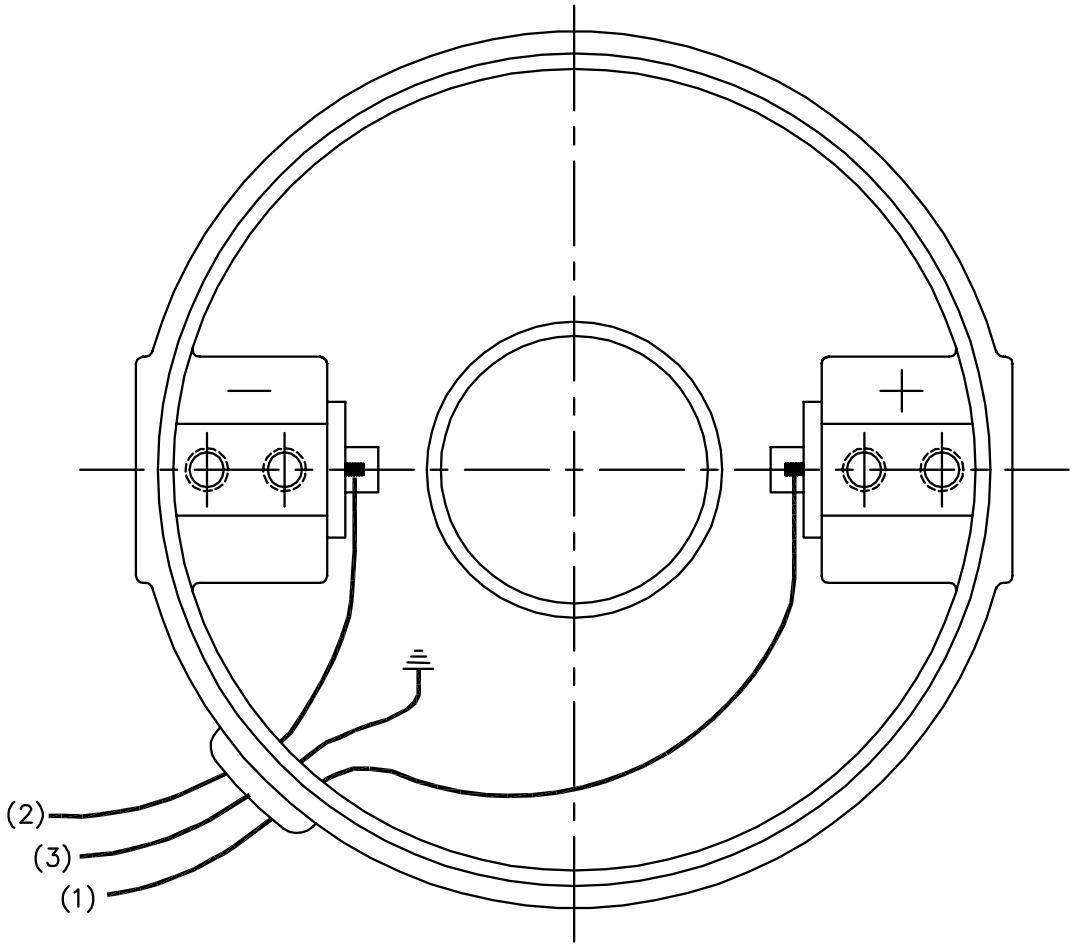

VIEWED FROM
DRIVE END

(1) COLOR MAY BE
RED
WHT
BLU

(2) COLOR MAY BE
BLK
BRN

(3) COLOR WHEN REQ.
GRN
GRN/YEL

REV. DESC: NEW			
REV. LTR: –	BY: PAW	REVISED: 09:06:34 09/16/2004	TDR: 341564
CD1899		FILE: CKA00025830	REF: CD1899
		MTL: –	

BALDOR ELECTRIC Co.

PM,2LD,REV,TANG,CK

CD1899