BALDOR
A MEMBER OF THE ABB GROUP

BALDOR • RELIANCE

Product Information Packet

GF4032BG

F-932-40-B7-G

Copyright © All product information within this document is subject to Baldor Electric Company copyright © protection, unless otherwise noted.

Nameplate NP1753L			
INPUT H.P.	2.20		
RATIO	40	R TORQ-INLB	2374
	F-932-40-B7-G		
CAT./SPEC	GF4032BG	GR0136C028	
SERIAL NO.			

BALDOR
A MEMBER OF THE ABB GROUP

Parts List

Part Number	Description	Quantity
HG0019A08	932 WORMGEAR HOUSING, SYMM SEALED	1.000 EA
HA4021A06	1/2 NPTF-HX SOC PIPE PLUG 3/4 TAPER	1.000 EA
926-1SR	N5000-281 WALDES TRUARC RETAINING RING	1.000 EA
WM0064B24	932 MTZ WORM ASSY 40:1 RATIO 7/8 BORE	1.000 EA
BG5306A01	5306 OPEN,D.ROW,ANG.CONTACT,SLUSH	1.000 EA
HW5060A38	RET RING 5160-118(WALDES)	1.000 EA
926-11-10	I/P BEARING SHIM .010" THICK	1.000 EA
926-11-3	I/P BEARING SHIM .003" THICK	3.000 EA
BS0034A01	926-3 BEARING SUPPORT, OPEN	1.000 EA
HW4600D07	1.000 X 1.499 X 0.250 SGLLIP, CR #9876	1.000 EA
10XN3118K14	5/16-18 X .88 HEX MACH SCREW, GRADE 5	4.000 EA
HW4600F16	1.688 X 2.835 X 0.469 SGLLIP, HNBR	1.000 EA
GF0007A01	926-3F56 GEAR FLANGE MACH 2.62 & 3.25 CD	1.000 EA
84XN3118J24	5/16-18X1 1/2 HX SOC HD CP MACH SCR UN S	4.000 EA
HW1001A31	LOCKWASHER 5/16, ZINC PLT.591 OD, .319 I	4.000 EA
BS0023A03	932-5 BG SPT ASSY, OPEN - FOR SYMM H	1.000 EA
GS0038A01	WORMGEAR GASKET, .003 (GREEN), 5.72 ID X	1.000 EA
GS0038A02	WORMGEAR GASKET, .005 (BLUE), 5.72 ID X	2.000 EA
GS0038A03	WORMGEAR GASKET, .010 (BROWN), 5.72 ID X	2.000 EA
HW4600C89	1.375 X 2.125 X 0.311 DBLLIP	1.000 EA
10XN3118K14	5/16-18 X .88 HEX MACH SCREW, GRADE 5	6.000 EA
SG0015B08	932 GR SHF ASSY 40:1, SGL O/P, W/COM	1.000 EA
BS0051A02	932 OPT BG SPT ASSY, CLOSED - FOR	1.000 EA
GS0038A01	WORMGEAR GASKET, .003 (GREEN), 5.72 ID X	1.000 EA

BALDOR A MEMBER OF THE ABB GROUP

Parts List (continued)

Part Number	Description	Quantity
GS0038A02	WORMGEAR GASKET, .005 (BLUE), 5.72 ID X	2.000 EA
GS0038A03	WORMGEAR GASKET, .010 (BROWN), 5.72 ID X	2.000 EA
10XN3118K14	5/16-18 X .88 HEX MACH SCREW, GRADE 5	6.000 EA
FN0084A00	FAN, MOLDED PLASTIC 932-400, 4.63 OD	1.000 EA
84XN1032J12	SCREW, 10-32 X 3/4", SHC, AS	1.000 EA
XY1032A02	10-32 HEX NUT DIRECTIONAL SERRATION	1.000 EA
HW1020A06	WASHER SIZE = M6, METRIC FLAT WASHER,	1.000 EA
FH0016A00	FAN COVER, 932, SABIC XENOY X5410	1.000 EA
12XN1032A08	10-32X1/2 HEX HD SLTD	4.000 EA
MJ1000A90	KLUBERSYNTH UH1-6-460 WORMGEAR OIL	0.625 GA
MJ5019A01	ADHESIVE LOCTITE #680 WAS BAD4525	0.001 EA
MJ5004A35	ADHESIVE LOCTITE #243-31 50 ML	0.001 EA
MJ5001A19	LOCTITE #598 ULTRA BLACK, 50 LB PAIL, IT	0.010 LB
MG1000G28	S-9282E MED CHARCOAL METALLIC GREY	0.010 GA
LB5042	TOE TAG, OIL PREFILL KLUBERSYN (250/pk)	1.000 EA
LT0066A08	REDUCER MAINT - KLUBE (1700/bx) 8/09	1.000 EA
NP1753L	RIVETED LASER NP, GEAR REDUCER, UH1 6-46	1.000 EA
LB1242	ADHESIVE PATCH 1.10 X 2.03 X .045 THICK	1.000 EA
G1PA1002	PKG GROUP, LG GEAR, W/G1PK5002A01	1.000 EA
HW2513A16	KEY .312 X 2.500 1018 STEEL	1.000 EA
MJ1000B01	ANTISEIZE - ALTEMP Q NB 50, 750 GRAM CAN	0.001 EA
HW0003D03	USER H/W PKG - 3/8 BOLT, WASHER & 7/16 P	1.000 EA
HA3556A02	WORM BORE PLUG 7/8 BORE, CAPLUGS WW-11X	1.000 EA

BALDOR
A MEMBER OF THE ABB GROUP

Accessories

Part Number	Description	Multiplier
B32H71	BASE-HORIZONTAL POS. A/B 932	A8
B32V81	BASE-VERTICAL LOW POS. D/F 932	A8
B32V91	BASE-VERTICAL HIGH POS. C/E 932	A8
FL32HK	OUTPUT FLANGE KIT, STAMP STEEL 932	A8
133-6FBA	INPUT BUSHING KIT 5/8 TO 7/8	A8
RBK32B5	RISER BLOCK KIT 56C/140TC 932	A8

BALDOR
A MEMBER OF THE ABB GROUP

No performance data has been assigned to this product.

BALDOR
A MEMBER OF THE ABB GROUP

GY0136A01

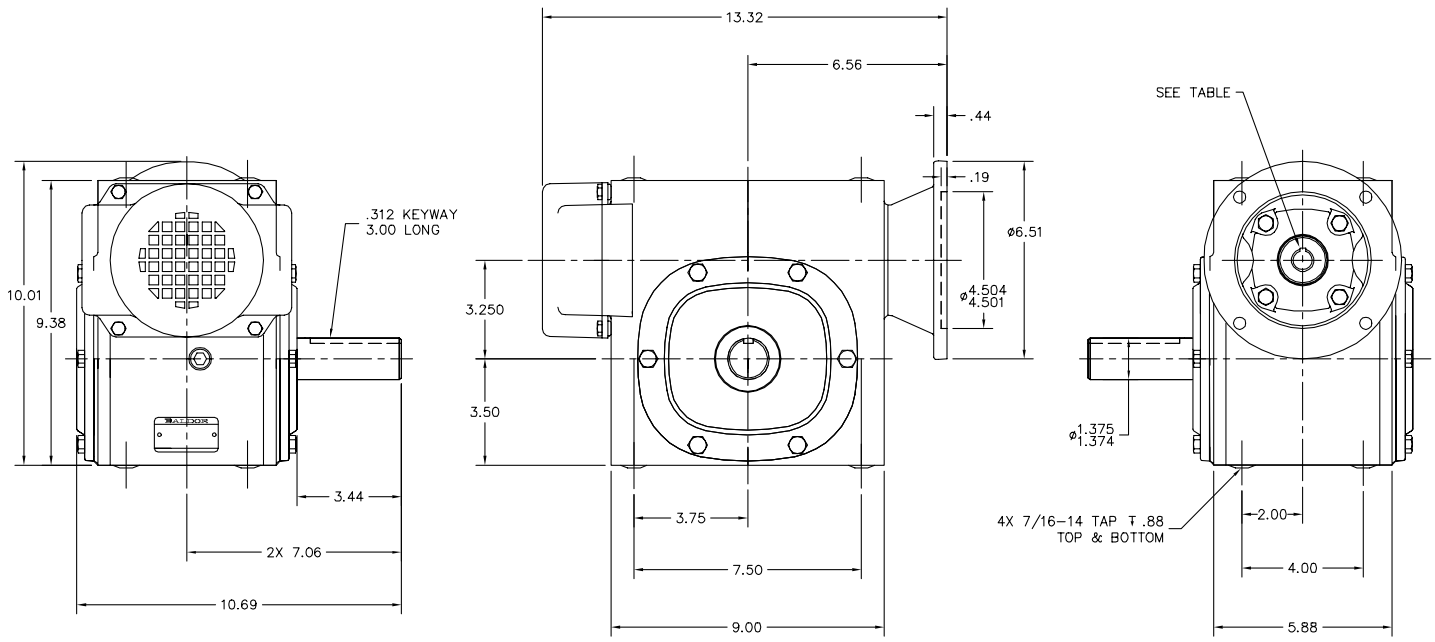

TABLE:

	BORE	KEYWAY
B5	.625	.188
B7	.875	.188

GY0136A01

CUST. NAME:	CUST. P.O.:	REV. DESC: REVISE OP SHAFT TOL TO 1.375/1.374			BALDOR
MODEL:	CATALOG/SPEC NO.:	REV. LTR: C	VERSION: 03	TDR: 000000821261	
RATIO: MAX. INPUT HP:	OUTPUT TORQUE:	FILE: \CKA\00010\114	REVISED: 11:07:33 10/08/2013	BY: CKMICRO	F-932-B5/B7-G STANDARD MOUNTING
RATINGS ARE AGMA CLASS 1 SERVICE AT 1750 RPM INPUT	CERTIFIED BY:	MTL: -			SH 1 of 2

BALDOR A MEMBER OF THE ABB GROUP

GY0136A01

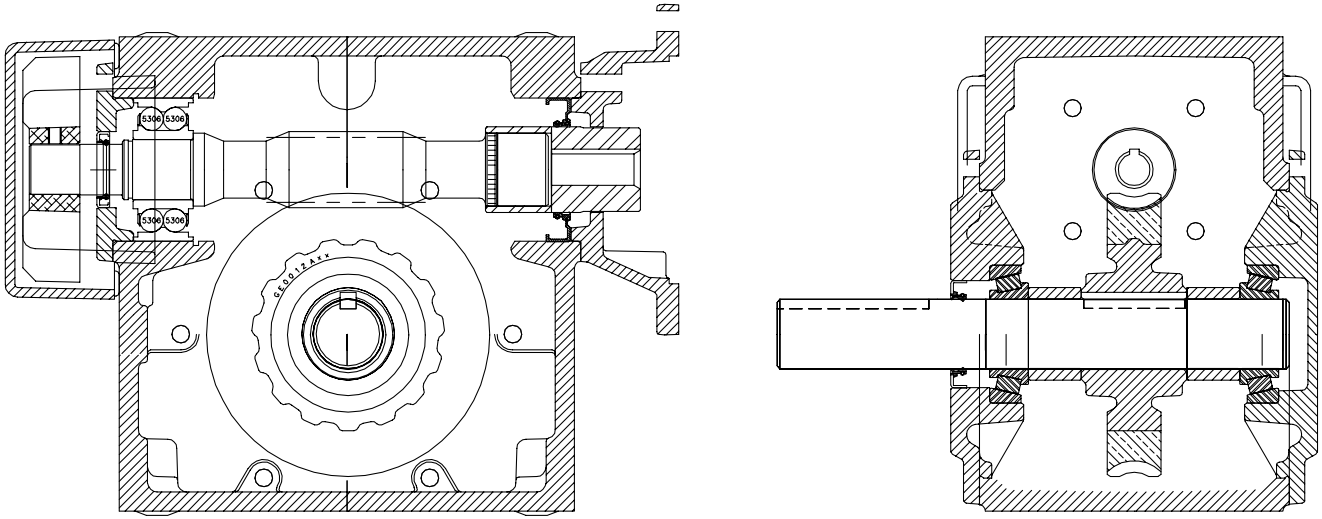

GY0136A01

CUST. NAME:		CUST. P.O.:	REV. DESC: REVISE OP SHAFT TOL TO 1.375/1.374			BALDOR
MODEL:		CATALOG/SPEC NO.:	REV. LTR: C	VERSION: 03	TDR: 000000821261	
RATIO:	MAX. INPUT HP:	OUTPUT TORQUE:	FILE: \CKA\00010\114	REVISED: 11:07:35 10/08/2013	BY: CKMICRO	F-932-B5/B7-G STANDARD MOUNTING
RATINGS ARE AGMA CLASS 1 SERVICE AT 1750 RPM INPUT		CERTIFIED BY:	MTL: -			SH 2 of 2

BALDOR
A MEMBER OF THE ABB GROUP