BALDOR
A MEMBER OF THE ABB GROUP

BALDOR • RELIANCE

Product Information Packet

FDL3610M

3HP,1750RPM,1PH,60HZ,184,3640LC,TEFC,F1

Copyright © All product information within this document is subject to Baldor Electric Company copyright © protection, unless otherwise noted.

Part Detail							
Revision:	A	**Status:**	PRD/A	**Change #:**		**Proprietary:**	No
Type:	AC	**Prod. Type:**	3640LC	**Elec. Spec:**	36WGY739	**CD Diagram:**	CD0002A02
Enclosure:	TEFC	**Mfg Plant:**		**Mech. Spec:**	36Q171	**Layout:**	36LYQ171
Frame:	184	**Mounting:**	F1	**Poles:**	04	**Created Date:**	12-13-2013
Base:	RG	**Rotation:**	R	**Insulation:**	F	**Eff. Date:**	01-28-2014
Leads:	2#14 A PH,3#16 B&J					**Replaced By:**	
Literature:		**Elec. Diagram:**					

BALDOR A MEMBER OF THE ABB GROUP

Nameplate NP1280L								
CAT.NO.	FDL3610M							
SPEC.	36Q171Y739G1							
HP	3							
VOLTS	230							
AMP	15.5							
RPM	1750							
FRAME	184	HZ	60	PH	1			
SER.F.	1.00	CODE	M	DES	L	CL	F	
NEMA-NOM-EFF	80	PF	76					
RATING	40C AMB-CONT							
CC		USABLE AT 208V						
DE	6206	ODE	6205					
ENCL	TEFC	SN						

BALDOR
A MEMBER OF THE ABB GROUP

Parts List

Part Number	Description	Quantity
SA274229	SA 36Q171Y739G1	1.000 EA
RA260816	RA 36Q171Y739G1	1.000 EA
TPBRD3929SP	THERMAL 1PH 1.25 MAN REF BRD2945 TDR #58	1.000 EA
36CB1000A22	CONDUIT BOX, MACH	1.000 EA
37GS1000SP	GASKET, CONDUIT BOX STD., .06 THICK LEXI	1.000 EA
51XB1016A08	10-16X 1/2HXWSSLD SERTYB	2.000 EA
11XW1032G06	10-32 X .38, TAPTITE II, HEX WSHR SLTD U	1.000 EA
HW3001B01	003SS CUP WASHER, FOR #8 SCREW	1.000 EA
HA6015A08	THERMAL RETAINER (PLATED)	1.000 EA
RM1014A01SP	BUTYL RUB.THRM COV. (MENA)	1.000 EA
51XB1214A10	12-14 X 5/8HX WS SL SR TYBX	2.000 EA
36EP3101B12	FREP TEFC 36L/M 205 BRG W/EYEBOLT, NO GR	1.000 EA
HW3200A01	3/8-16X3/4 I-BLT WELDED F/S	1.000 EA
13XF0832A08	8-32 X.50 PAN HD,SLTD, TYPE F SCREW, ZIN	2.000 EA
36GS3000	GASKET, CAPACITOR COVER LEXIDE	1.000 EA
10XN2520A12	O1/4-20X 3/4 HEX HEAD CAP	2.000 EA
HW5100A05	WVY WSHR F/205 & 304 BRGS	1.000 EA
36EP3100C11	PU ENDPLATE, MACH	1.000 EA
HW4600B50SP	SEAL 1.156 X 1.874 X 0.250 SINGLE LIP DB	1.000 EA
HW4600B36SP	V-RING SLINGER 1.188 X 1.690 X 0.240	1.000 EA
HW3200A01	3/8-16X3/4 I-BLT WELDED F/S	1.000 EA
XY2520A12	1/4-20 HEX NUT, DIRECTIONAL SERRATIONS	4.000 EA
51XB1214A16	12-14X1.00 HXWSSLD SERTYB	1.000 EA
36FH4009A122	IEC FH,W/ OUT GREASER & SPL NOTCH	1.000 EA

BALDOR
A MEMBER OF THE ABB GROUP

Parts List (continued)

Part Number	Description	Quantity
51XW1032A06	10-32 X .38, TAPTITE II, HEX WSHR SLTD S	3.000 EA
36CB4516	36 LIPPED CB LID	1.000 EA
37GS1001SP	GASKET, CONDUIT BOX LID, .06 THICK LEXID	1.000 EA
51XW0832A07	8-32 X .44, TAPTITE II, HEX WSHR SLTD SE	4.000 EA
HW2501D13SP	KEY, 3/16 SQ X 1.375	1.000 EA
HA7000A01	KEY RETAINER 7/8" DIA SHAFT	1.000 EA
85XU0407S04	4X1/4 U DRIVE PIN STAINLESS	2.000 EA
LB1115N	LABEL,LIFTING DEVICE (ON ROLLS)	1.000 EA
LB1087	LABEL,MANUAL RESET (ROLL LABEL)	1.000 EA
MJ5001A27	32220KN GRAY SEALER	0.001 QT
MJ1000A75	GREASE, POLYREX EM EXXON (USe 4824-15A)	0.050 LB
MG1025C02	RAL6081, LIGHT SUPER TAN, GLOSS 85,	0.022 GA
MG1025Z20	ACTIVATOR WILKOFAST 060.32	0.010 GA
36FN3000A01SP	EXFN, PLASTIC, 7.00 OD, .912 ID	1.000 EA
HA3101A28	THRUBOLT 1/4-20 X 12.500 OHIO ROD	4.000 EA
36CB5005A10	CAPACITOR BOX KIT,36CB3800,EC1216C06	1.000 EA
TP5059	GENERIC THERMAL KIT	1.000 EA
SP5064A01	MODEL 36 TYPE LC STATIONARY SWITCH LEAD	1.000 EA
LC0002	CONNECTION LABEL	1.000 EA
LB1119N	WARNING LABEL	1.000 EA
MN416A01	TAG-INSTAL-MAINT no wire (1200/bx) 10/13	1.000 EA
LB1506	LABEL "AMERICAN MADE" 1.50 X 1.00	1.000 EA
LB1125C01	STD (STOCK) CARTON LABEL BALDOR WITH FLA	1.000 EA
NP1280L	ALUM FARM DUTY UL CSA CC THERMAL	1.000 EA

Parts List (continued)

Part Number	Description	Quantity
36PA1001	PACKAGING GROUP	1.000 EA

BALDOR
A MEMBER OF THE ABB GROUP

AC Induction Motor Performance Data

Record # 11466 - Typical performance - not guaranteed values

Winding: 36WGY739-R001	**Type:** 3640LC	**Enclosure:** TEFC

Nameplate Data				230 V, 60 Hz: Single Voltage Motor	
Rated Output (HP)	3			Full Load Torque	9 LB-FT
Volts	230			Start Configuration	direct on line
Full Load Amps	15.5			Breakdown Torque	32 LB-FT
R.P.M.	1750			Pull-up Torque	31 LB-FT
Hz	60	Phase	1	Locked-rotor Torque	37 LB-FT
NEMA Design Code	L	KVA Code	M	Starting Current	144 A
Service Factor (S.F.)	1			No-load Current	10.7 A
NEMA Nom. Eff.	80	Power Factor	76	Line-line Res. @ 25ºC	0.472 Ω A Ph 1.53 Ω B Ph
Rating - Duty	40C AMB-CONT			Temp. Rise @ Rated Load	85°C

Load Characteristics 230 V, 60 Hz, 3 HP

% of Rated Load	25	50	75	100	125	150
Power Factor	39	56	68	76	82	85
Efficiency	53.4	70.8	77.9	81	82	81.9
Speed	1791	1782	1775	1768	1759	1749
Line amperes	10.9	11.8	13.5	15.5	18	20.7

BALDOR A MEMBER OF THE ABB GROUP

Performance Graph at 230V, 60Hz, 3.0HP Typical performance - Not guaranteed values

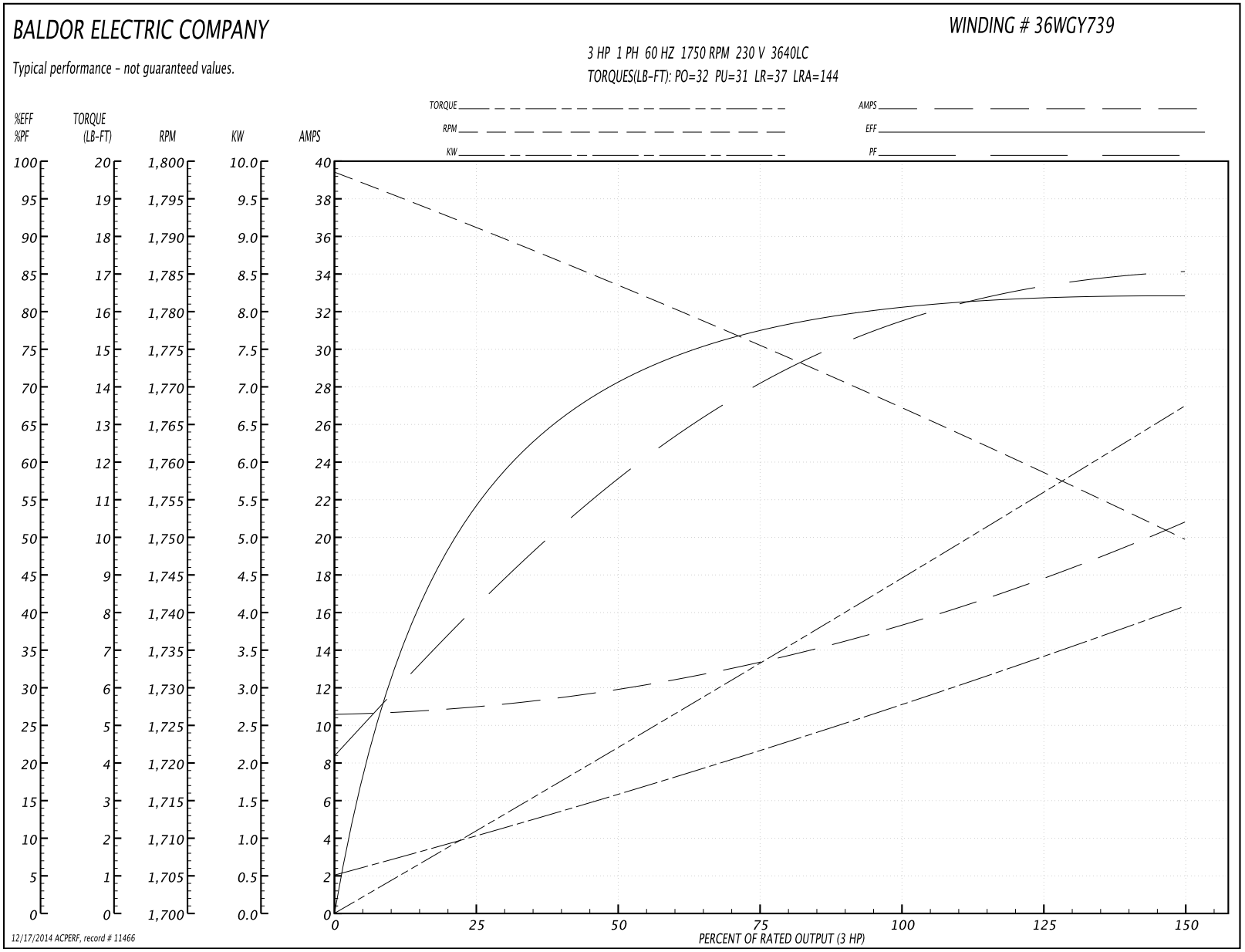

BALDOR
A MEMBER OF THE ABB GROUP

36LYQ171

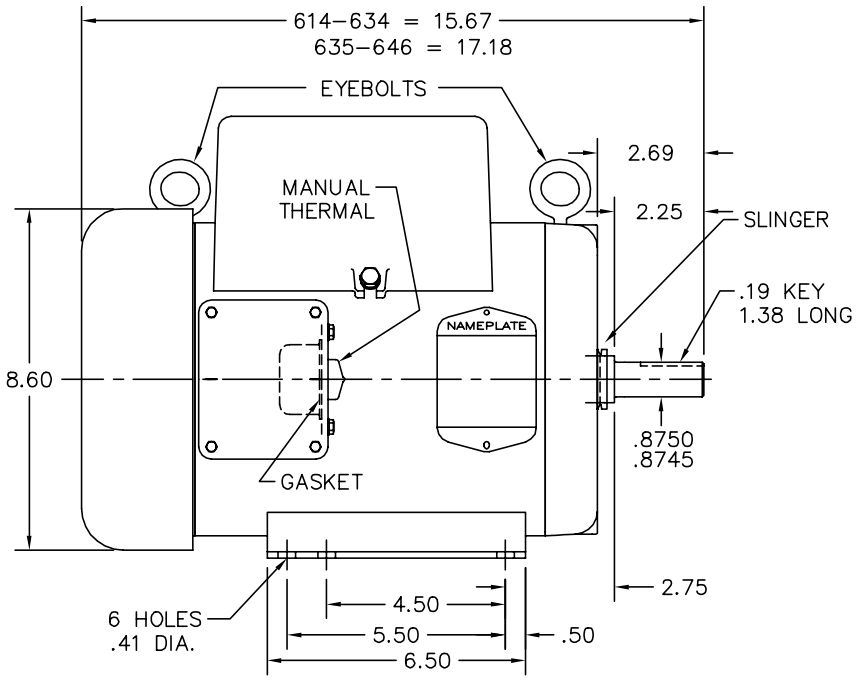

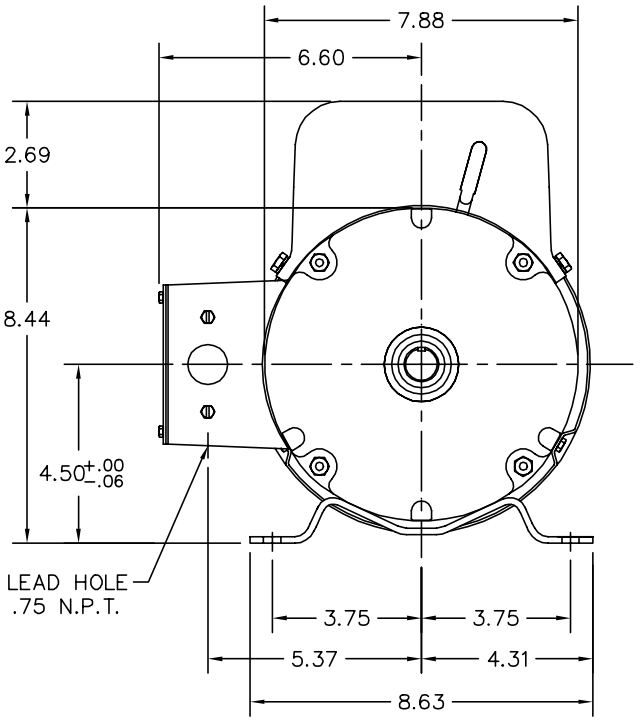

FARM DUTY

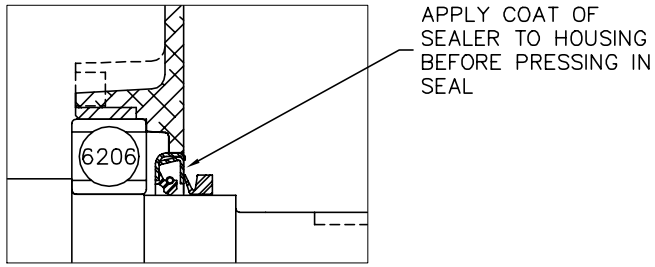

PULLEY END DETAIL

CUSTOMER IS RESPONSIBLE FOR DETERMINING THAT BALDOR'S PRODUCT WILL PERFORM SUITABLY IN THE INTENDED APPLICATION.

REV. DESC: NEW		
REV. LTR: –	VERSION: 00	TDR: 000000828186
FILE: \AAA\00205\558	REVISED: 02:28:37 12/16/2013	BY: ENTROE0
MTL: –		

BALDOR

HOR 36LC 182–4 TEFC W/1.25 MTO, SEAL PU END, SEALED BEARINGS

SH 1 of 1

36LYQ171

BALDOR A MEMBER OF THE ABB GROUP

CD0002A02

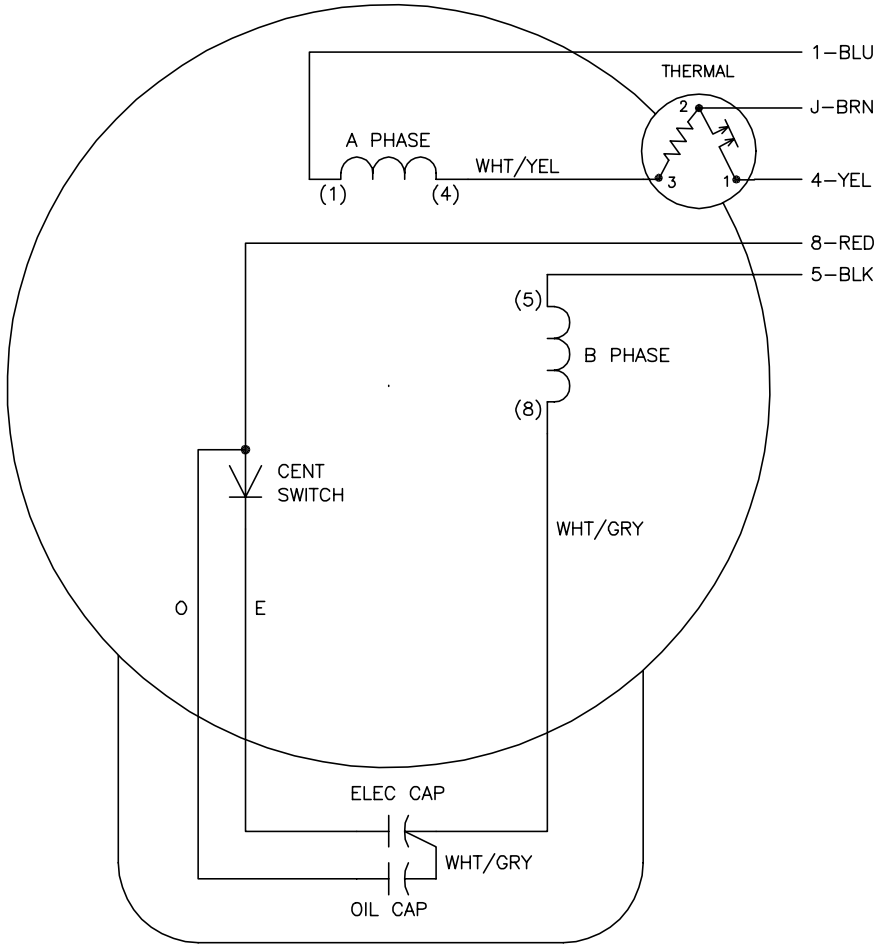

	LINE A	LINE B	JOIN
STD	1,8	4	J,5
OPP	1,5	4	J,8

NOTES:

1. STANDARD ROTATION IS CCW FACING END OPPOSITE SHAFT EXTENSION.
2. MULTIPLE CAPACITORS ARE CONNECTED IN PARALLEL UNLESS OTHERWISE SPECIFIED.
3. LEAD COLORS ARE OPTIONAL. LEADS MUST ALWAYS BE NUMBERED AS SHOWN.

REV. DESC: REMOVE 2–TERMINAL THERMAL DETAIL, SEE CD0002A04			BALDOR ELECTRIC Co.
REV. LTR: D	VERSION: 01	TDR: 000000360649	
CD0002A02	FILE: \AAA\00007\520	REVISED: 17:11:40 04/15/2005	TYPE LC, SV, REV, THERMAL, 5 LEADS
	MTL: –	BY: ENJOEPO	

CD0002A02

BALDOR A MEMBER OF THE ABB GROUP