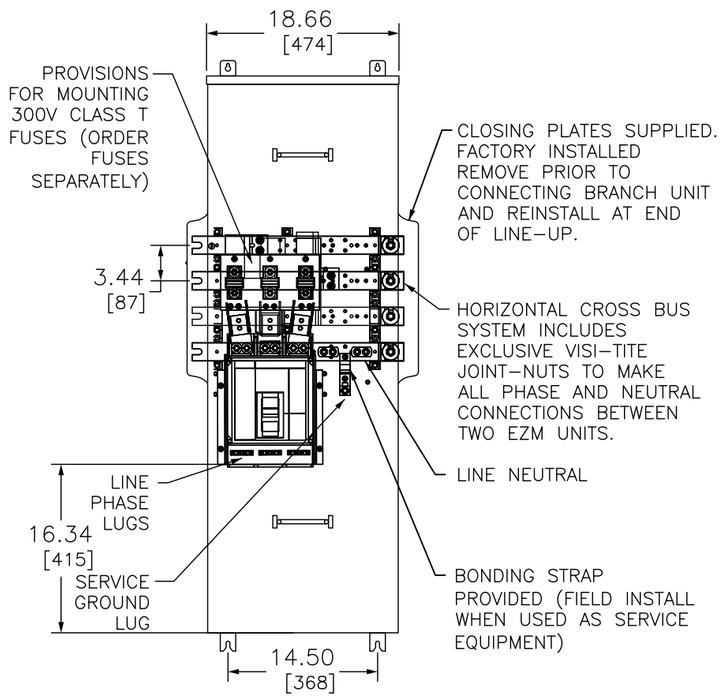

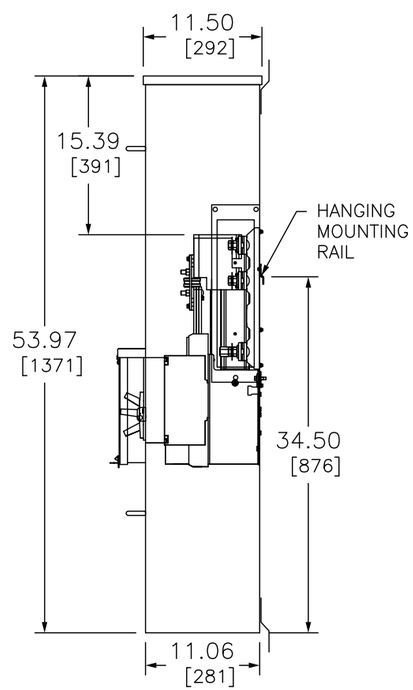

ADDITIONAL NOTES:

● HANDLE EXTENSION AVAILABLE M-FRAME BREAKER ORDER KIT 33195.

♦ ALTERNATE LUG KITS ARE AVAILABLE FOR USE ON LINE SIDE OF MOLDED CASE CIRCUIT BREAKER (REFER TO DIGEST 177, PAGE 7-64).

▼ ALTERNATE NEUTRAL LUG AVAILABLE , ORDER ONE (1) KIT , MMLK250 FOR (1) # 1/0 AWG-600 KCMIL OR (2) # 1/0 AWG - 250 KCMIL AL/CU (KIT INCLUDES THREE , 2 -BARREL LUGS), NEUTRAL WILL ACCOMODATE TWO , 2 BARREL LUGS ONLY

KNOCKOUTS		
SYMBOL	CONDUIT SIZE	
	IN	MM
A	.50	13
B	.75	19
E	1.50	38
F	2.00	51
G	2.50	64
H	3.00	76
I	3.50	89
J	4.00	102

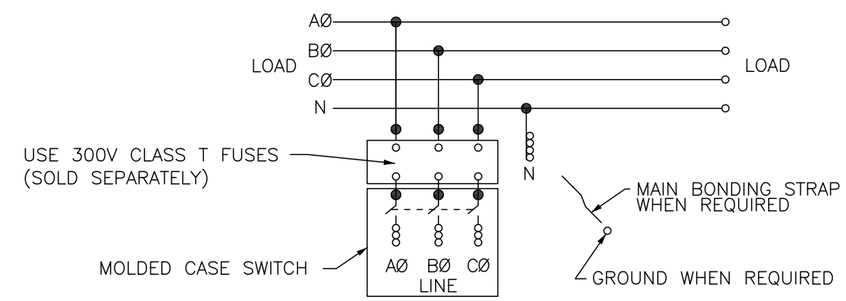

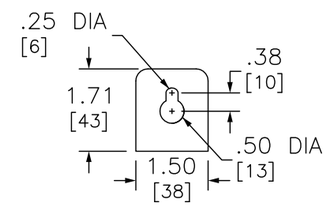

TOP MOUNTING BRACKET

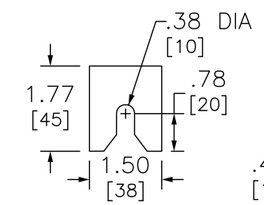

BOTTOM MOUNTING BRACKET

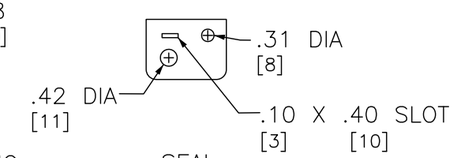

SEAL BRACKET

DUAL DIMENSIONS: INCHES / MILLIMETERS

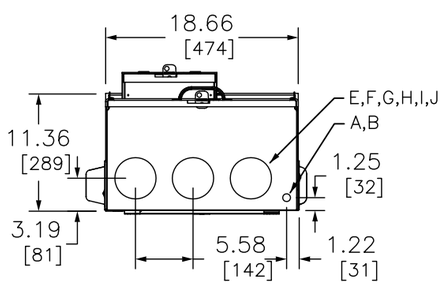

SYSTEM TYPE	MAIN RATING (AMPERES)	CATALOG NUMBER	MOLDED CASE SWITCH (FACTORY INSTALLED)	PROVISIONS TO MOUNT 300V CLASS T FUSES (ORDER SEPARATELY) FUSE RANGE AVAILABLE	LINE SIDE PHASE LUG WIRE RANGE FOR AL OR CU CONDUCTORS (SUPPLIED WITH BREAKER)	LINE SIDE NEUTRAL LUG WIRE RANGE FOR AL OR CU CONDUCTORS (FACTORY INSTALLED)	GROUND LUG WIRE RANGE (FACTORY INSTALLED)
3ø 4W 208Y/120 VAC 240/120 VAC DELTA	600	EZM3600FS	MJP32000Z60●	450-600A	(3) 3/0-500 ♦	(4) 3/0-500 ▼	(1) #6-300
	800	EZM3800FS	MJP32000Z80●	601-800A	(3) 3/0-500 ♦	(4) 3/0-500 ▼	(1) #6-300

FUSES NOT INCLUDED, ORDER 300V CLASS T FUSES 100kA SCCR (INTERRUPTING RATING RMS SYMMETRICAL)

NOTES:
FINISH - GRAY BAKED ENAMEL POWDER COAT PAINT OVER CLEANED GALVANNEALED STEEL.
UL LISTED - FILE E-10582, VOL. M, E131840, VOL.M
SUITABLE FOR USE AS SERVICE EQUIPMENT.
MAIN HORIZONTAL CROSS BUS RATED AT 800 AMPERES (ALUMINUM 1/4 X 1 3/4 TWO LAMINATIONS).
MAIN DEVICES ARE SEALABLE BY UTILITY.
GANGABLE MULTI-METERING EQUIPMENT IS DESIGNED FOR WALL MOUNTING ONLY.
(NOT SUITABLE FOR FLOOR STANDING EQUIPMENT.)
‡WHEN USED AS SERVICE EQUIPMENT, INSTALL BONDING STRAP AND REINSTALL GROUND LUG WHERE APPROPRIATE.

EZ METER-PAK GANGABLE
MULTI-METERING EQUIPMENT
2000A 3PH 4W MAIN CIRCUIT BREAKER DEVICE W/ERMS
OVERHEAD / UNDERGROUND FEED
RAINPROOF TYPE 3R ENCLOSURES

SQUARE D™ by Schneider Electric

DWG# NO. PWFDS-SYRS-0176