BALDOR • RELIANCE

Product Information Packet

EM44354T-4

350HP,1780RPM,3PH,60HZ,449T,TEFC,F1

Copyright © All product information within this document is subject to ABB Motors and Mechanical Inc. copyright © protection, unless otherwise noted.

Part Detail

Revision:	C	**Status:**	PRD/A	**Change #:**		**Proprietary:**	No
Type:	AC	**Elec. Spec:**	A44WG5597	**CD Diagram:**	416820-008	**Mfg Plant:**	
Mech. Spec:		**Layout:**	617427-176	**Poles:**	04	**Created Date:**	04-02-2015
Base:		**Eff. Date:**	10-12-2017	**Leads:**	6#1 (02 per group)		

Specs

Catalog Number:	EM44354T-4	**Heater Indicator:**	No Heater
Enclosure:	TEFC	**Insulation Class:**	F
Frame:	449T	**Inverter Code:**	Not Inverter
Frame Material:	Iron	**IP Rating:**	NONE
Output @ Frequency:	350.000 HP @ 60 HZ	**KVA Code:**	G
Synchronous Speed @ Frequency:	1800 RPM @ 60 HZ	**Motor Lead Quantity/Wire Size:**	12 @ 1 AWG
Voltage @ Frequency:	460.0 V @ 60 HZ	**Motor Type:**	A44160M
XP Class and Group:	None	**Mounting Arrangement:**	F1
XP Division:	Not Applicable	**Power Factor:**	88
Agency Approvals:	CCSA US	**Product Family:**	General Industrial
	CSA EEV	**Pulley End Bearing Type:**	Ball
Auxillary Box:	No Auxillary Box	**Pulley Face Code:**	Standard
Base Indicator:	Rigid	**Shaft Ground Indicator:**	No Shaft Grounding
Bearing Grease Type:	Polyrex EM (-20F +300F)	**Shaft Rotation:**	Reversible
Current @ Voltage:	389.000 A @ 460.0 V	**Shaft Slinger Indicator:**	No Slinger
Design Code:	B	**Speed Code:**	Single Speed
Drip Cover:	No Drip Cover	**Motor Standards:**	NEMA
Duty Rating:	CONT	**Starting Method:**	Wye Start - Delta Run

Feedback Device:	NO FEEDBACK

Thermal Device - Bearing:	None
Thermal Device - Winding:	None

Nameplate NP2496L

MOBIL POLYREX EM

Nameplate NP2349L

SPEC NO.	A44-7087-3038			CAT.NO.	EM44354T-4			FRAME	449T		
HP	350	VOLTS	460	PHASE	3	DESIGN	B	TYPE	P		
RPM	1785	AMPS	389	HZ	60	AMB	40	SF	1.15		
DRIVE END BEARING	90BC03J30X			DUTY	CONT	INSUL.CLASS	F				
OPP D.E. BEARING	90BC03J30X			ENCL	TEFC	CODE	G				
SER.NO.				POWER FACTOR	88	NEMA-NOM-EFFICIENCY	96.2				
						MAX CORR KVAR	60	GUARANTEED EFFICIENCY	95.4		
						NEMA NOM/CSA QUOTED EFF					
								MOTOR WEIGHT			

Parts List

Part Number	Description	Quantity
SA296088	SA A44-7087-3038	1.000 EA
RA282139	RA A44-7087-3038	1.000 EA
421948044	LABEL, MYLAR	1.000 EA
NP2496L	MOTOR LUBE NAMEPLATE	1.000 EA
000613006PU	N/P (RELEASE QTY 10,000) UL CSA LABEL	1.000 EA
000692000FF	N/P	1.000 EA
000692000VD	LABEL WARNING	1.000 EA
NP2349L	SUPER-E ,SS, CSA, CSA SUPER-E	1.000 EA
089490099A	G28 BRKT 089490098WCA KB	1.000 EA
415072001B	CLAMP	1.000 EA
083199126A	G440 MOLDED FAN COVER	1.000 EA
034180014DA	KEY 1/4X1/4X1-3/4 L	1.000 EA
078557001E	FAN 440 078557001F	1.000 EA
004824015A	GREASE POLYREX EM	1.160 LB
032018020FK	HHCS 3/4-10X2-1/2 PLTD.	4.000 EA
032018008CK	HHCS 3/8-16X1L PLATED	4.000 EA
032018030DK	HHCS 1/2-13X3-3/4 PLTD.	3.000 EA
034630002AB	CPLG 1/4" PLATED	1.000 EA
415096002A	CPLG 1/8 HEX TYPE	1.000 EA
410700004A	WSHR	1.000 EA
034017014AB	LCKW 3/8 STD. PLATED	4.000 EA
034530072BB	PIPE NIPPLE,DE - 440-BS	1.000 EA
034530072AB	P/NIP 1/8X9"L Threaded both ends	1.000 EA
034690005AB	PPLG 3/4 PLATED	1.000 EA

Parts List (continued)

Part Number	Description	Quantity
034690002AB	PPLG 1/4" PLTD.	1.000 EA
034690001AB	1/8" NPT SQHDPLG	1.000 EA
032620016LA	SOCKET SET SCREW-449	3.000 EA
702623022A	G28 AIR DEFLECTOR DRIVE END -- PLASTIC	1.000 EA
418151014G	RETAIN RING	1.000 EA
034630002AB	CPLG 1/4" PLATED	1.000 EA
034530072BB	PIPE NIPPLE,DE - 440-BS	1.000 EA
034690002AB	PPLG 1/4" PLTD.	1.000 EA
034690001AB	1/8" NPT SQHDPLG	1.000 EA
702623013A	THERMAL BARRIER -- G28 -- BRACKET MTD	1.000 EA
032018004BK	HHCS 5/16-18X1/2 PLATED	3.000 EA
034017013AB	LCKW 5/16 STD. PLATED	3.000 EA
089490099A	G28 BRKT 089490098WCA KB	1.000 EA
032018020FK	HHCS 3/4-10X2-1/2 PLTD.	4.000 EA
032018030DK	HHCS 1/2-13X3-3/4 PLTD.	3.000 EA
034530072AB	P/NIP 1/8X9"L Threaded both ends	1.000 EA
415096002A	CPLG 1/8 HEX TYPE	1.000 EA
032018006BK	HHCS 5/16-18X3/4 PLATED	3.000 EA
034001013AB	FLTW BAFFLE	3.000 EA
415915007G	GASK, LAC	1.000 FT
406056008A	GASKET, TERBD 440	1.000 EA
418150003A	GREASE FITTING CAP	1.000 EA
MG1025Y17	WILKOFAST, 789.701, SUPER E PEARL GOLD	0.500 GA
032018008DK	HHCS 1/2-13X1 PLATED	4.000 EA

702616012T	CONDUIT BOX	1.000 EA
035000001A	ALFTG 1/8" 1610-BL	1.000 EA
406099000A	PLUG - FAN COVER 320-440	1.000 EA
035000001A	ALFTG 1/8" 1610-BL	1.000 EA
418150003A	GREASE FITTING CAP	1.000 EA
033775004EA	DRSCR #6-1/4 304 S.S.	2.000 EA
034180054KA	KEY 7/8X7/8X6-3/4 L	1.000 EA
604797056	400-447 FRAME 60 X 42	1.000 EA
032510026D	CARRIAGE BOLT - 440	2.000 EA
034001014AB	FLAT WASHER 3/8"PLATED	2.000 EA
034001016AB	WSHR .562ID 1.375OD .109	2.000 EA
033300014AC	HEX NUT, SHIPPING - 400	2.000 EA
604799003C	PLASTIC BAG 42X32X46	1.000 EA

BALDOR • RELIANCE Product Information Packet: EM4354T-4 - 350HP,1780RPM,3PH,60HZ,449T,TEFC,F1

S/O	FRAME	HP	TYPE	PHASE/ HERTZ	RPM	VOLTS
	449T	350	P	3/60	1785	460

AMPS	DUTY	AMB °C/ INSUL	S.F.	NEMA DESIGN	CODE LETTER	ENCLOSURE
389	CONT	40/F	1.15	B	G	TEFC

E/S	ROTOR	TEST S.O.	TEST DATE	STATOR RES. @25 °C OHMS (BETWEEN LINES)
---	418143059AEQ	---	---	.00938

PERFORMANCE

LOAD	HP	AMPERES	RPM	% POWER FACTOR	% EFFICIENCY
NO LOAD	0	108	1800	3.69	0
1/4	87.6	142	1796	60.8	94.8
2/4	175	211	1792	80.5	96.4
3/4	262	296	1788	86.0	96.5
4/4	350	389	1783	87.6	96.2
5/4	438	485	1779	88.2	95.7

SPEED TORQUE

	RPM	TORQUE % FULL LOAD	TORQUE LB.-FT.	AMPERES
LOCKED ROTOR	0	187	1930	2550
PULL UP	600	160	1645	2280
BREAKDOWN	1726	250	2580	1325
FULL LOAD	1783	100	1031	389

AMPERES SHOWN FOR 460 VOLT CONNECTION. IF OTHER CONNECTIONS ARE AVAILABLE, THE AMPERES WILL VARY INVERSELY WITH THE RATED VOLTAGE.

TYPICAL DATA
XE MOTOR-NEMA NOM. EFF. 96.2 PCT.

BALDOR A MEMBER OF THE ABB GROUP	DRAWN BY: E.J.CHRISTIAN CHECKED BY: W.L. SMITH APPROVED BY: E.J.CHRISTIAN DATE: 07/18/16	AC MOTOR PERFORMANCE DATA	A44WG5597-R001 DATE ISSUED 12/04/17

REL S.O.	RPM 1785	S.F. 1.15	ROTOR 418143059AEQ
FRAME 449T	VOLTS 460	NEMA DESIGN B	TEST S.O. TYPICAL DATA
HP 350	AMPS 389	CODE LETTER G	TEST DATE ---
TYPE P	DUTY CONT	ENCLOSURE TEFC	STATOR RES. @ 25°C .00938
PHASE / HERTZ 3/60	AMB °C / INSUL 40/F	E/S ---	OHMS (BETWEEN LINES)

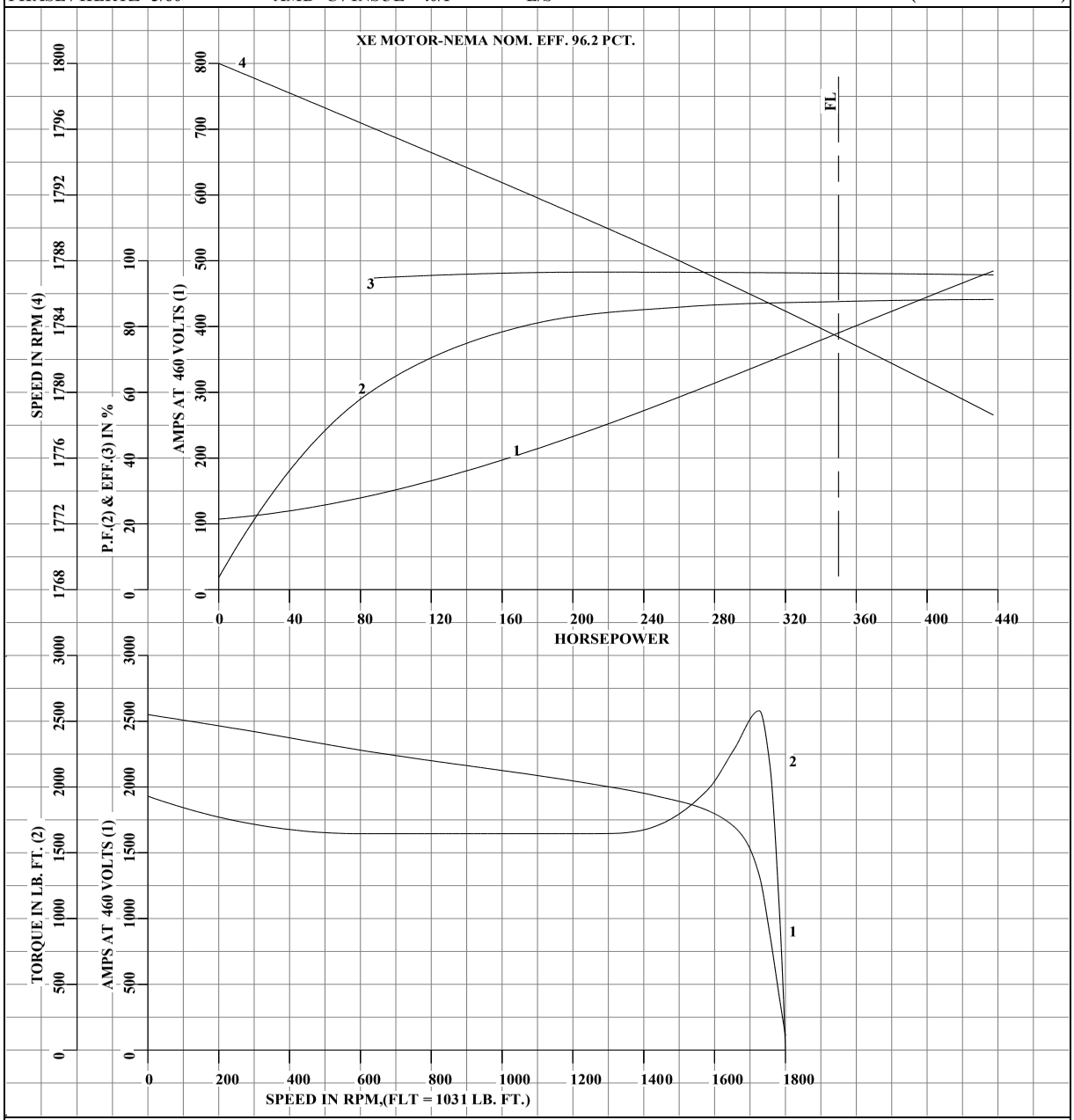

AMPERES SHOWN FOR 460 VOLT CONNECTION, IF OTHER VOLTAGE CONNECTIONS ARE AVAILABLE, THE AMPERES WILL VARY INVERSELY WITH THE RATED VOLTAGE.

BALDOR® A MEMBER OF THE ABB GROUP	DRAWN BY: E.J.CHRISTIAN CHECKED BY: W.L. SMITH APPROVED BY: E.J.CHRISTIAN DATE: 07/18/16	AC MOTOR PERFORMANCE DATA	A44WG5597-R001 ISSUE DATE 12/04/17

BALDOR • RELIANCE Product Information Packet: EM4354T-4 - 350HP,1780RPM,3PH,60HZ,449T,TEFC,F1

REL S.O.	RPM 1785	S.F. 1.15	ROTOR 418143059AEQ
FRAME 449T	VOLTS 460	NEMA DESIGN B	TEST S.O. TYPICAL DATA
HP 350	AMPS 389	CODE LETTER G	TEST DATE ---
TYPE P	DUTY CONT	ENCLOSURE TEFC	STATOR RES. @ 25°C .00938
PHASE / HERTZ 3/60	AMB °C / INSUL 40/F	E/S ---	OHMS (BETWEEN LINES)

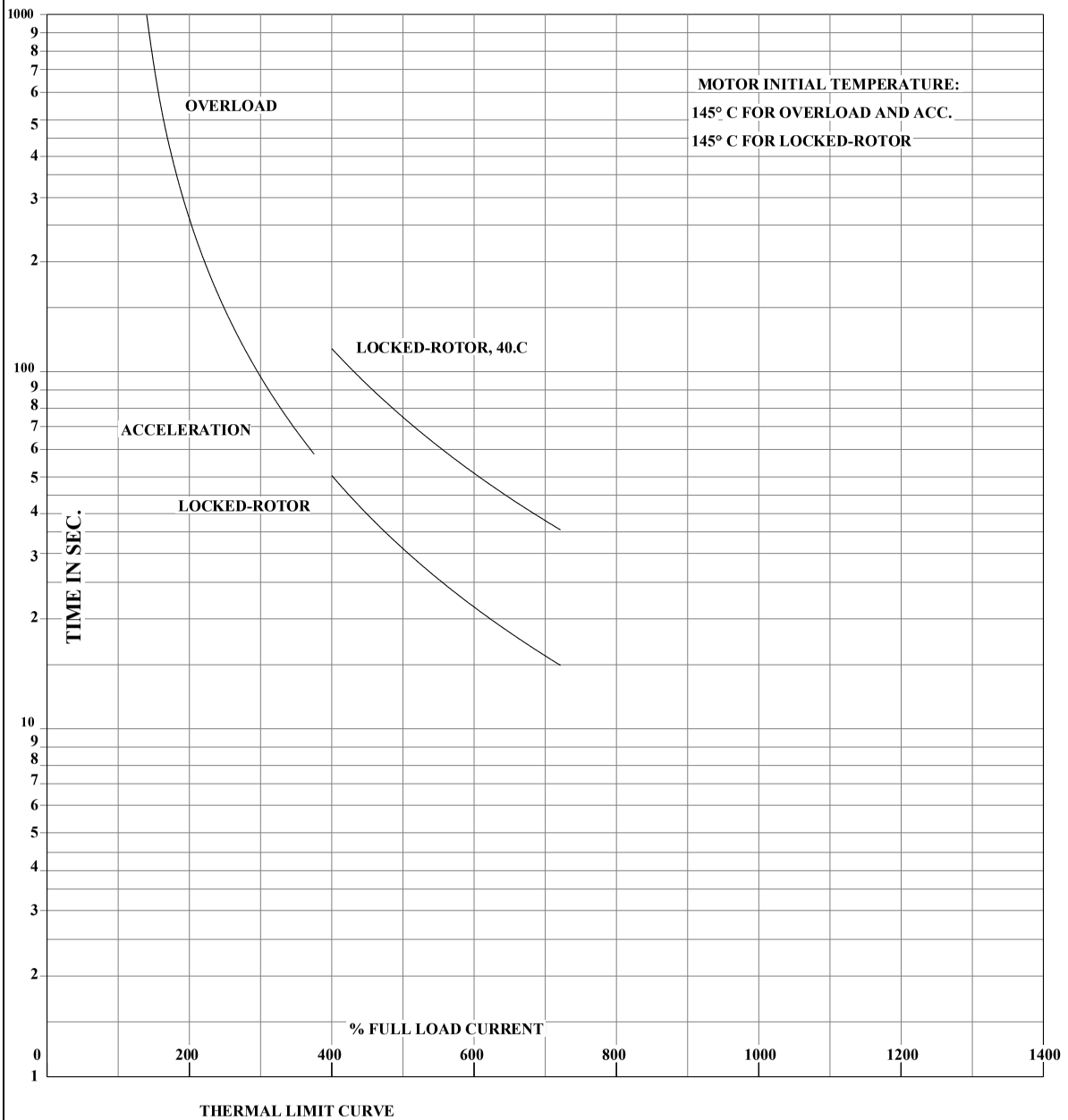

THERMAL LIMIT CURVE

AMPERES SHOWN FOR 460 VOLT CONNECTION, IF OTHER VOLTAGE CONNECTIONS ARE AVAILABLE, THE AMPERES WILL VARY INVERSELY WITH THE RATED VOLTAGE.

BALDOR® A MEMBER OF THE ABB GROUP	DRAWN BY: E.J.CHRISTIAN CHECKED BY: W.L. SMITH APPROVED BY: E.J.CHRISTIAN DATE: 07/18/16	AC MOTOR PERFORMANCE DATA	A44WG5597-R001 ISSUE DATE 12/04/17

BALDOR • RELIANCE Product Information Packet: EM4354T-4 - 350HP,1780RPM,3PH,60HZ,449T,TEFC,F1

617427-176

DUTY MASTER ALTERNATING CURRENT MOTORS

SQUIRREL-CAGE INDUCTION

ENCLOSURE: TOTALLY ENCLOSED FRAME 449T ABOVE NEMA RATINGS (1800 RPM MAX) COOLING: FAN COOLED

MOUNTING: FOOT INCLUDES 447T FRAME MTG HOLES

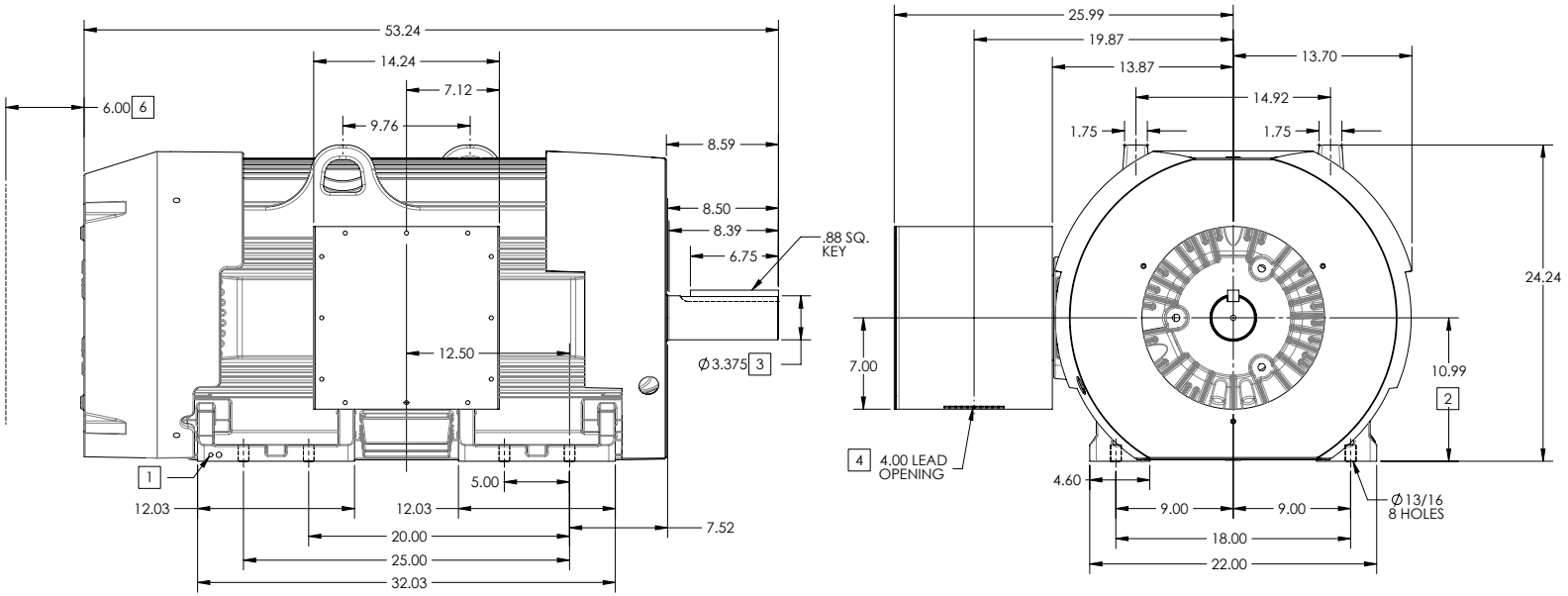

1. GROUND HOLES QTY 1 1/2-13 TAP; QTY 1 3/8-16 TAP
2. VARIES +.00,-.06
3. VARIES +.000,-.001
4. ON STANDARD MOTORS THIS IS CONDUIT SIZE. ON XT AND CORROSION PROOF MOTOR THIS IS PIPE TAP.
5. MOTOR WEIGHTS MAY VARY BY 15% DEPENDING ON RATING.
6. OBSTRUCTION MUST NO ENCROACH ON AIR INLET

CONDUIT BOX LOCATED ON OPPOSITE SIDE WHEN F-2.
IF MOUNTING CLEARANCE DETAILS ARE REQUIRED, CONSULT FACTORY.
MAXIMUM PERMISSIBLE SHAFT RUNOUT WHEN MEASURED AT END OF STANDARD SHAFT EXTENSION IS .003" T.I.R. TO 5 INCH DIA.

5 WEIGHT (LBS): 3130

DRIVE END AIR DEFLECTOR IS ONLY INCLUDED WHEN NECESSARY.

DIMENSIONS ARE IN INCHES; SEE SHEET 2 FOR DIMENSIONS IN MILLIMETERS

CUSTOMER IS RESPONSIBLE FOR DETERMINING THAT MOTOR PERFORMANCE IS SUITABLE IN THE APPLICATION.

SHEET NUMBER 1 OF 2

617427-176

REV. DESC: NEW DRAWING			
REV: -	VERSION: 00	REVISED: 03:12:20 02/04/2014	TDR: 000000836085
MODEL NO. 617427-176			
BY: RAGEC			C

BALDOR

G449T FT MTG 14X14X12 CENTER C/B F1

617427-176

617427-176

DUTY MASTER ALTERNATING CURRENT MOTORS

SQUIRREL-CAGE INDUCTION

ENCLOSURE: TOTALLY ENCLOSED FRAME 449T ABOVE NEMA RATINGS (1800 RPM MAX) COOLING: FAN COOLED

MOUNTING: FOOT INCLUDES 447T FRAME MTG HOLES

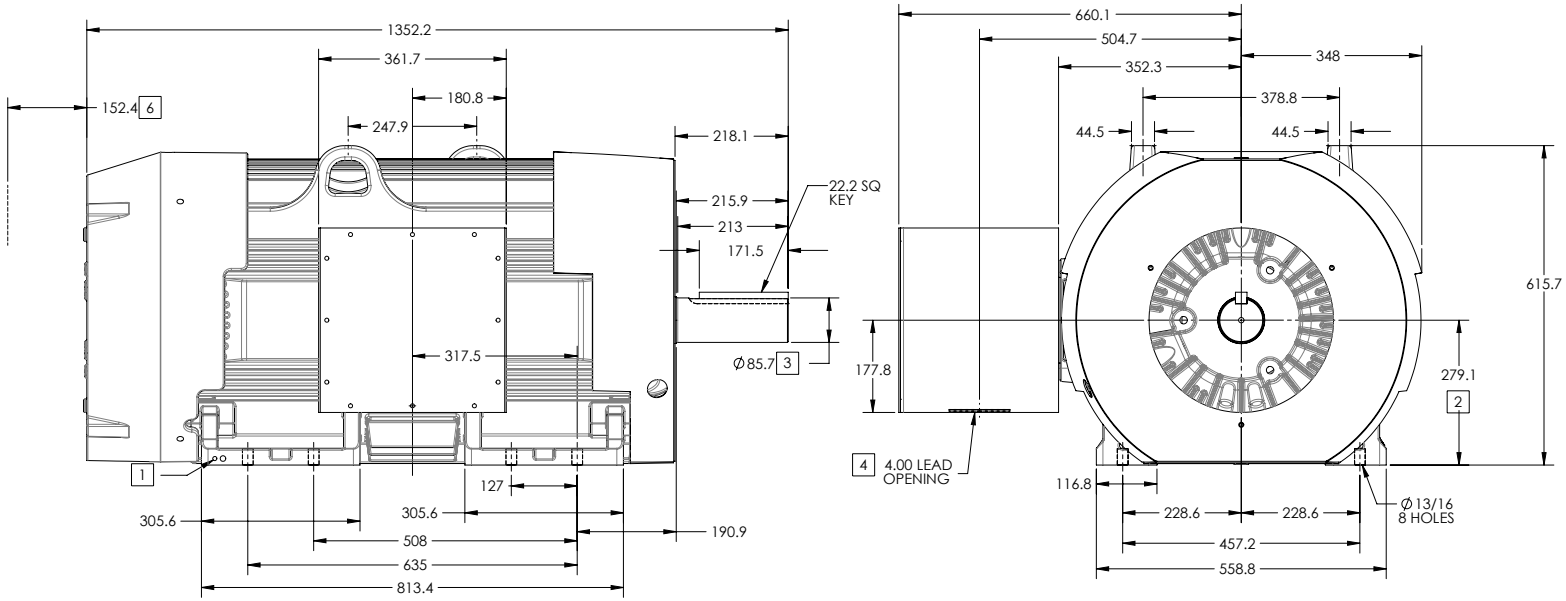

1. GROUND HOLES QTY 1 1/2-13 TAP; QTY 1 3/8-16 TAP
2. VARIES +.00,-.06
3. VARIES +.000,-.001
4. ON STANDARD MOTORS THIS IS CONDUIT SIZE. ON XT AND CORROSION PROOF MOTOR THIS IS PIPE TAP.
5. MOTOR WEIGHTS MAY VARY BY 15% DEPENDING ON RATING.
6. OBSTRUCTION MUST NO ENCROACH ON AIR INLET

CONDUIT BOX LOCATED ON OPPOSITE SIDE WHEN F-2.
IF MOUNTING CLEARANCE DETAILS ARE REQUIRED, CONSULT FACTORY.
MAXIMUM PERMISSIBLE SHAFT RUNOUT WHEN MEASURED AT END OF STANDARD SHAFT EXTENSION IS .08 MM T.I.R. TO 127 MM DIA.

5 WEIGHT (KGS): 1420

DRIVE END AIR DEFLECTOR IS ONLY INCLUDED WHEN NECESSARY.

DIMENSIONS ARE IN MILLIMETERS; SEE SHEET 1 FOR DIMENSIONS IN INCHES

CUSTOMER IS RESPONSIBLE FOR DETERMINING THAT MOTOR PERFORMANCE IS SUITABLE IN THE APPLICATION.

SHEET NUMBER 2 OF 2

617427-176

REV. DESC: NEW DRAWING			
REV: -	VERSION: 00	REVISED: 03:12:20 02/04/2014	TDR: 000000836085
MODEL NO. 617427-176			
BY: RAGEC			C

BALDOR

G449T FT MTG 14X14X12 CENTER C/B F1

617427-176

416820–008

A–C MOTOR
CONNECTION DIAGRAM

STANDARD 6 LEAD Y START – DELTA RUN

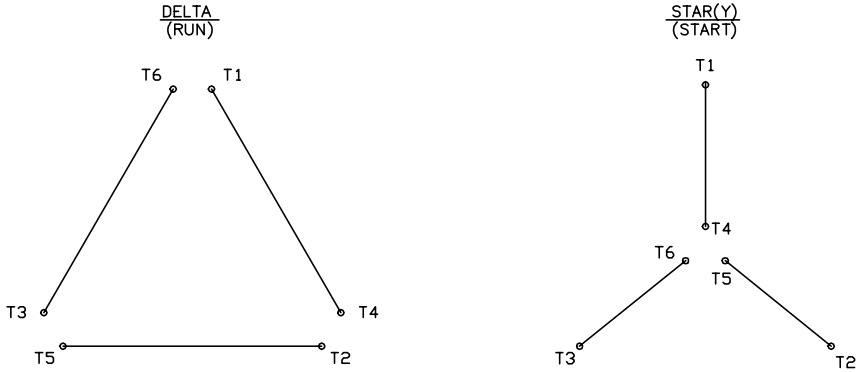

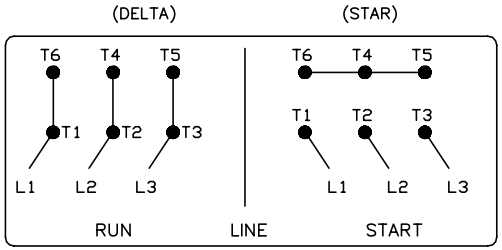

(N. P. 1767-DC)

REV. DESC: ADDED T4 TO Y CONNECT DIAGRAM		
REV. LTR: D	VERSION: 04	TDR: 000000847713
FILE: \RAG\00001\808	REVISED: 10:41:26 04/08/2014	BY: RAGJSS1
MTL: –		

BALDOR

CONNECT DIAGRAM STD 6 LEAD Y START DELTA RUN

SH 1 of 1

416820–008

Marketing maintained PDF of MN408:

http://www.baldor.com/support/Literature/Load.ashx/MN408?ManNumber=MN408

Marketing maintained PDF of MN416:

http://www.baldor.com/support/Literature/Load.ashx/MN416?ManNumber=MN416