07LYH002

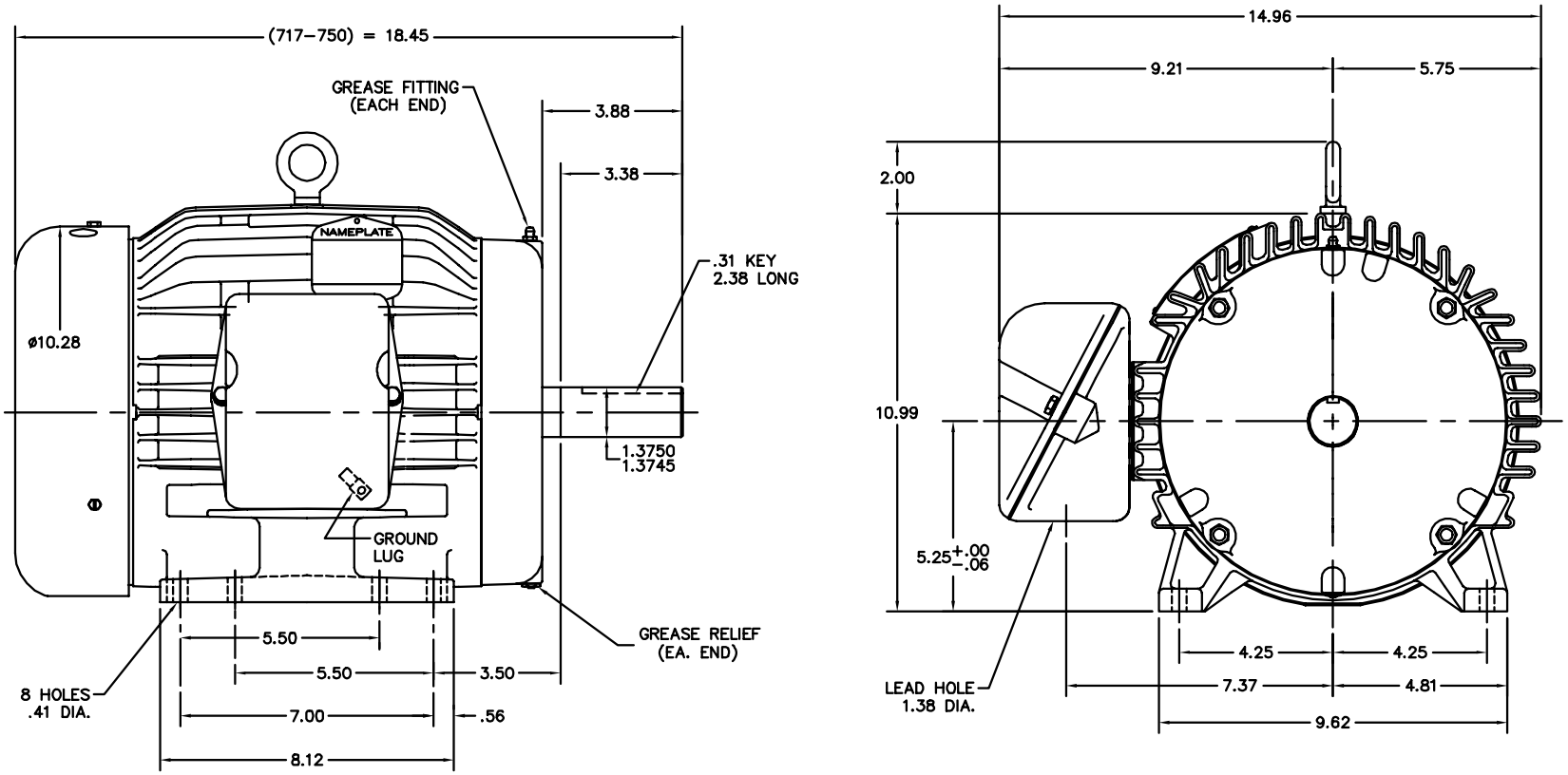

CUSTOMER IS RESPONSIBLE FOR DETERMINING THAT BALDOR'S PRODUCT WILL PERFORM SUITABLY IN THE INTENDED APPLICATION.

REV. DESC: REMOVE SUPER LABEL ON KOBX			BALDOR
REV. LTR: P	VERSION: 01	TDR: 000000895363	
FILE: \AAA\00016\291	REVISED: 09:58:42 03/04/2015	BY: ENALEMO	HORZ 213–5T TEFC 307M
MTL: –			SH 1 of 1

07LYH002