34LYB061

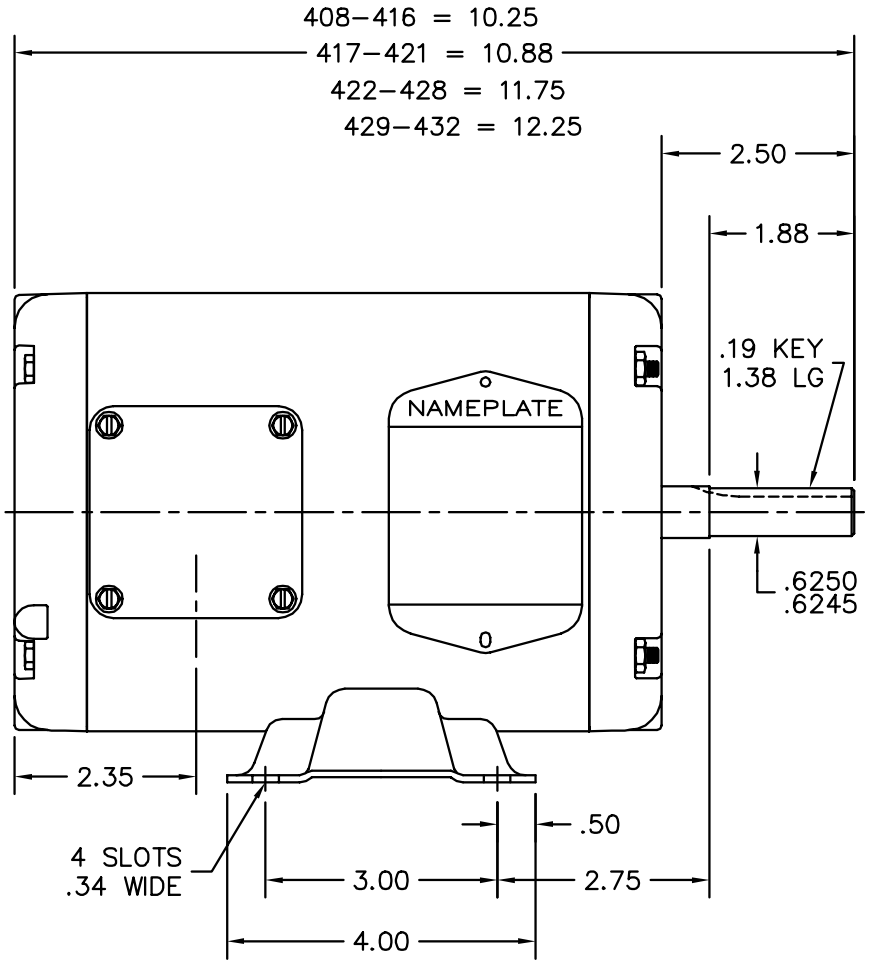

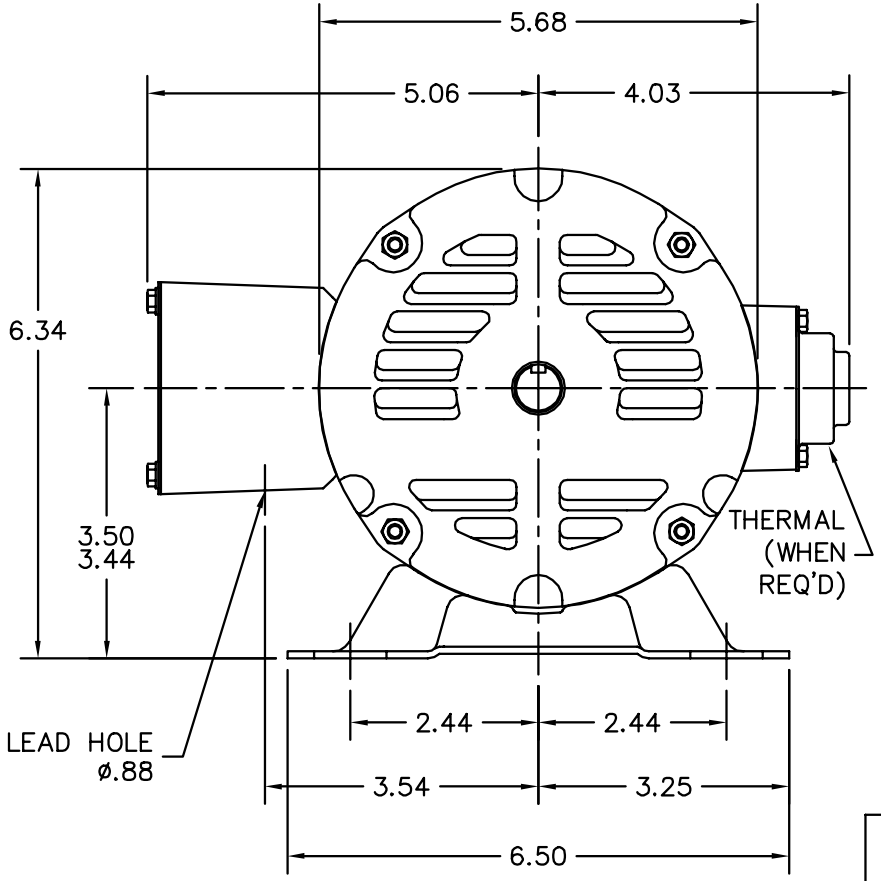

34LYB061

CUSTOMER IS RESPONSIBLE FOR DETERMINING THAT BALDOR'S PRODUCT WILL PERFORM SUITABLY IN THE INTENDED APPLICATION.

REV. DESC: REV TO FREEZE SECTION VIEW OF KOBX IN RIGHT VIEW		
REV. LTR: D	VERSION: 02	TDR: 000000939068
FILE: \AAA\00034\110	REVISED: 10:09:16 08/14/2015	BY: ENBENBO
MTL: –		

BALDOR

STD HORZ MODEL 34M NEMA 56 OPEN

SH 1 of 1