39LYK057

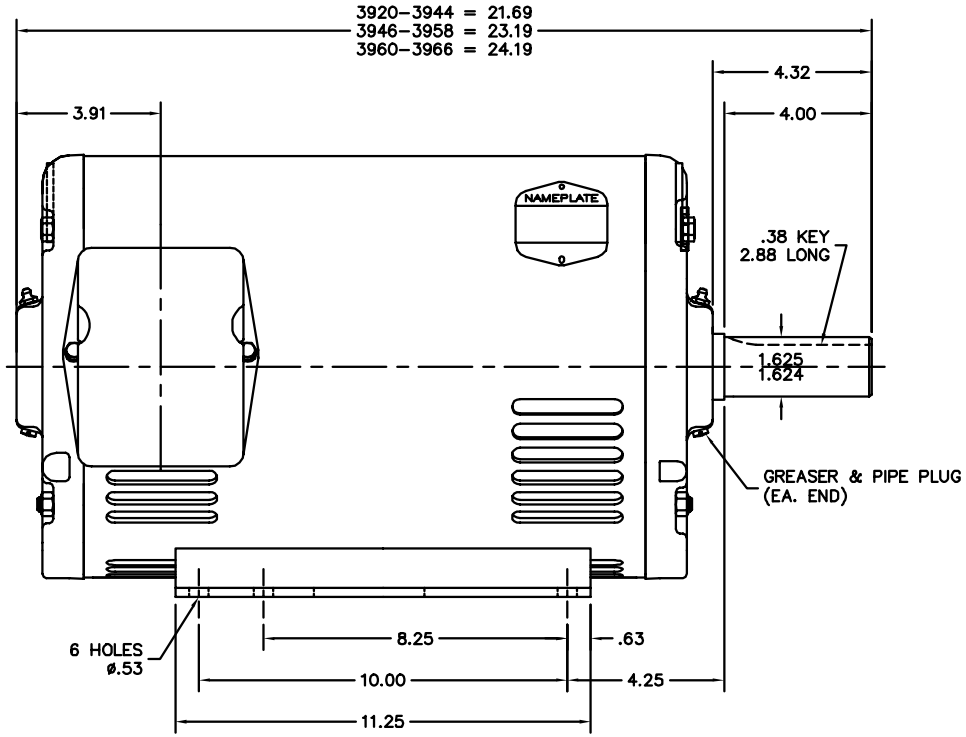

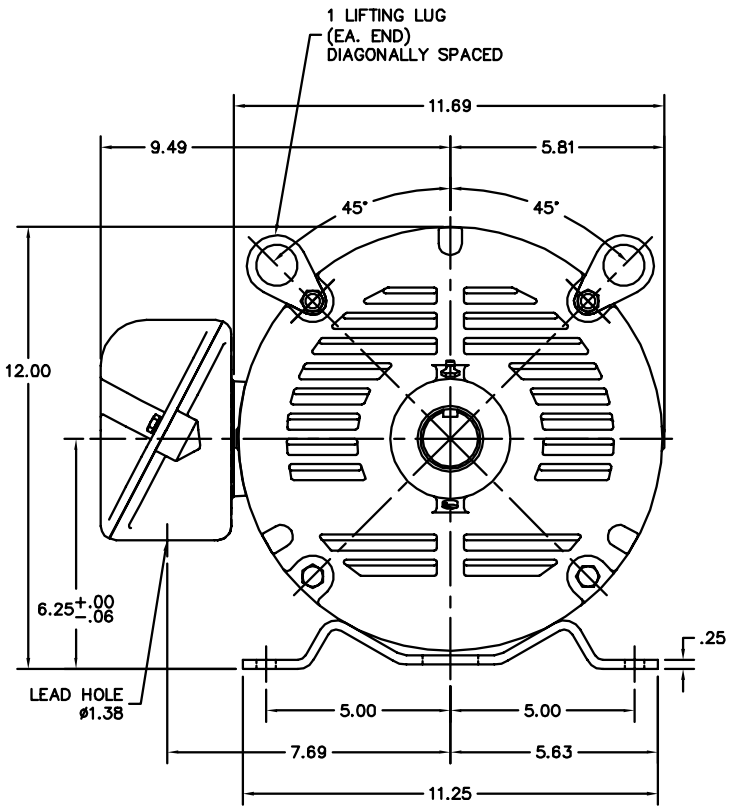

39LYK057

CUSTOMER IS RESPONSIBLE FOR DETERMINING THAT BALDOR'S PRODUCT WILL PERFORM SUITABLY IN THE INTENDED APPLICATION.

REV. DESC: UPDATED DESCRIPTION			BALDOR
REV. LTR: H	VERSION: 06	TDR: 000000855568	
FILE: \AAA\00049\866	REVISED: 03:22:41 05/28/2014	BY: ENNINDO	HORZ OPSB 254–6T SUPER–E
MTL: –			SH 1 of 1