35LYM019

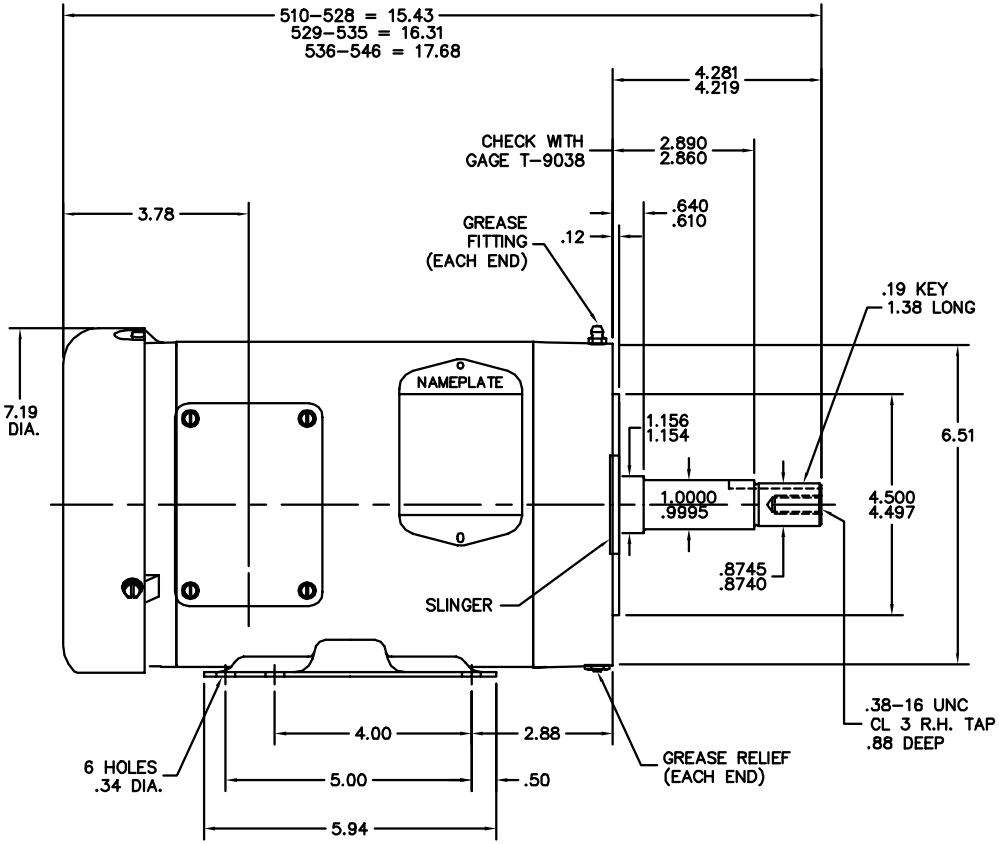

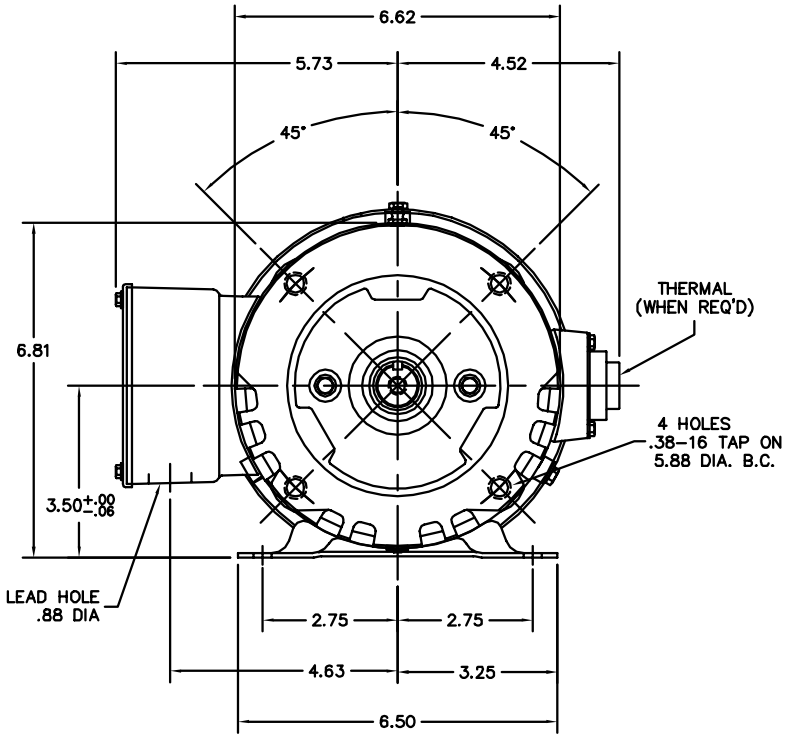

PULLEY END DETAIL

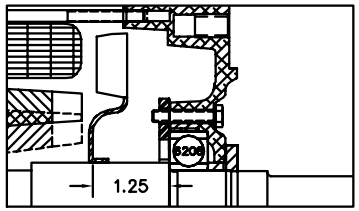

CUSTOMER IS RESPONSIBLE FOR DETERMINING THAT BALDOR'S PRODUCT WILL PERFORM SUITABLY IN THE INTENDED APPLICATION.

REV. DESC: REPLACE ENDPLATES			BALDOR - RELIANCE®
REV. LTR: R	VERSION: 03	TDR: 000001065250	
FILE: \AAA\00009\670	REVISED: 02:57:35 03/22/2018	BY: USJOBUR22	STD HORZ 143–5JM TEFC 35M
MTL: –			SH 1 of 1

35LYM019