09LYG944

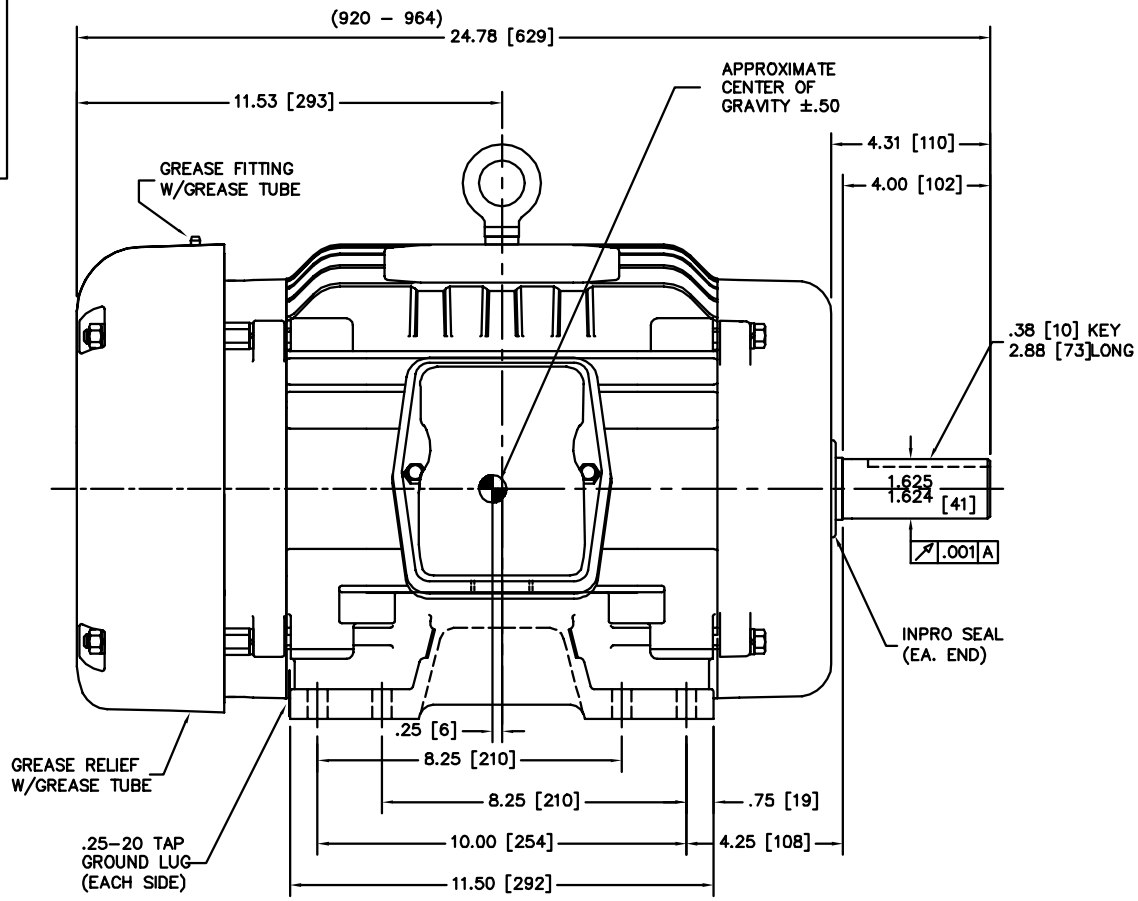

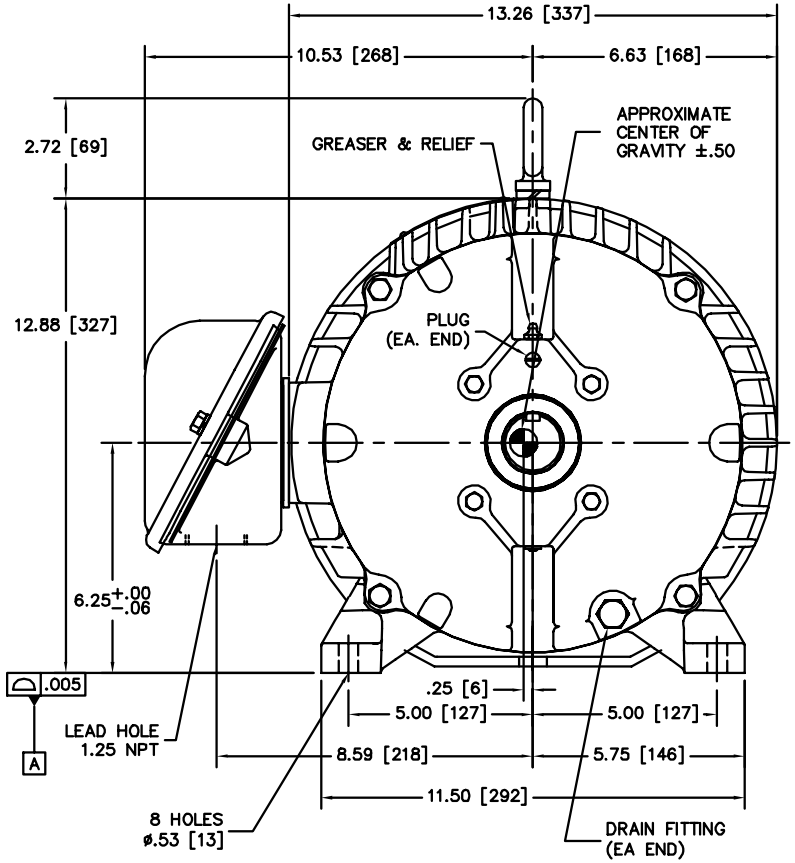

09LYG944

CUSTOMER IS RESPONSIBLE FOR DETERMINING THAT BALDOR'S PRODUCT WILL PERFORM SUITABLY IN THE INTENDED APPLICATION.

REV. DESC: ADDED METRIC DIMS			BALDOR
REV. LTR: N	VERSION: 13	TDR: 000001036532	
FILE: \AAA\00133\636	REVISED: 03:09:44 08/07/2017	BY: ENNINDO	HORZ TEFC 254–6T IEEE–841 W/309 BRGS
MTL: –			SH 1 of 1