10LYH292

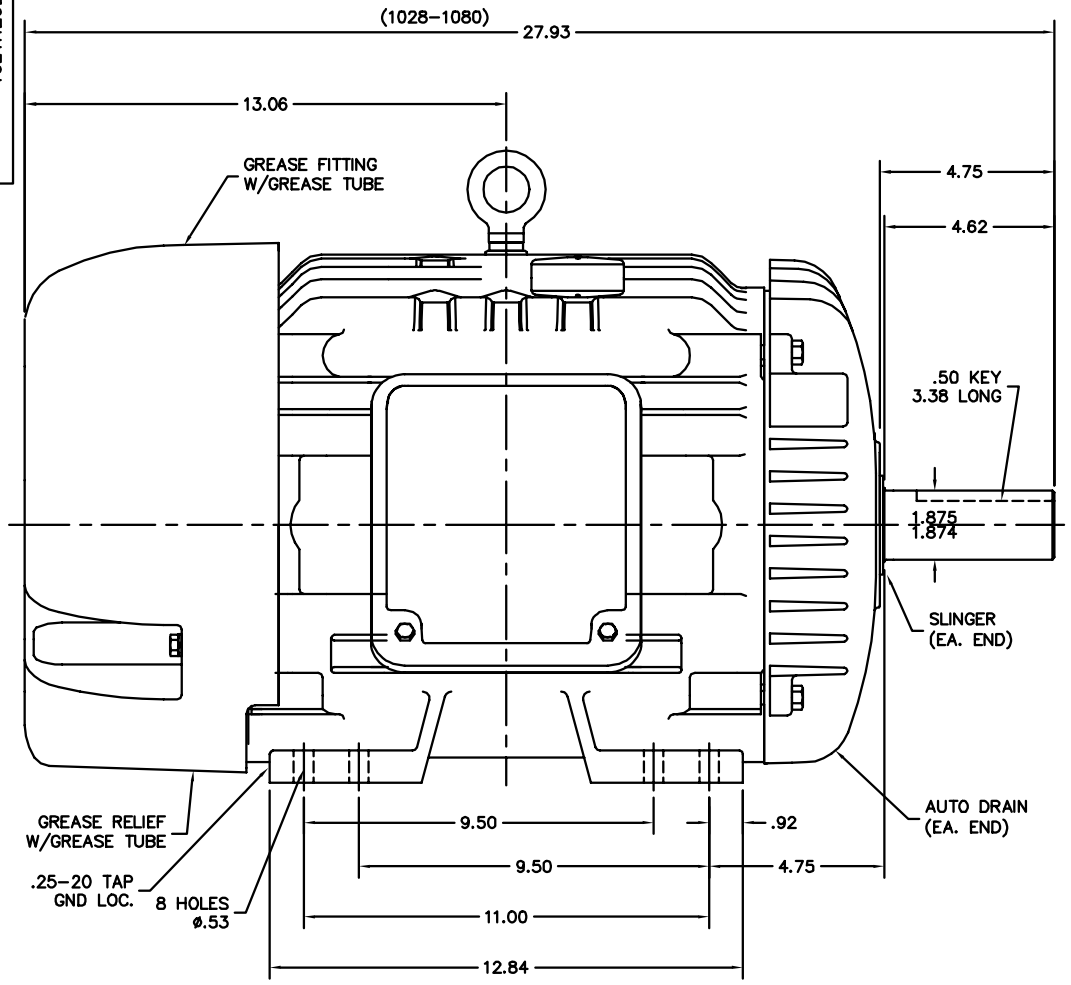

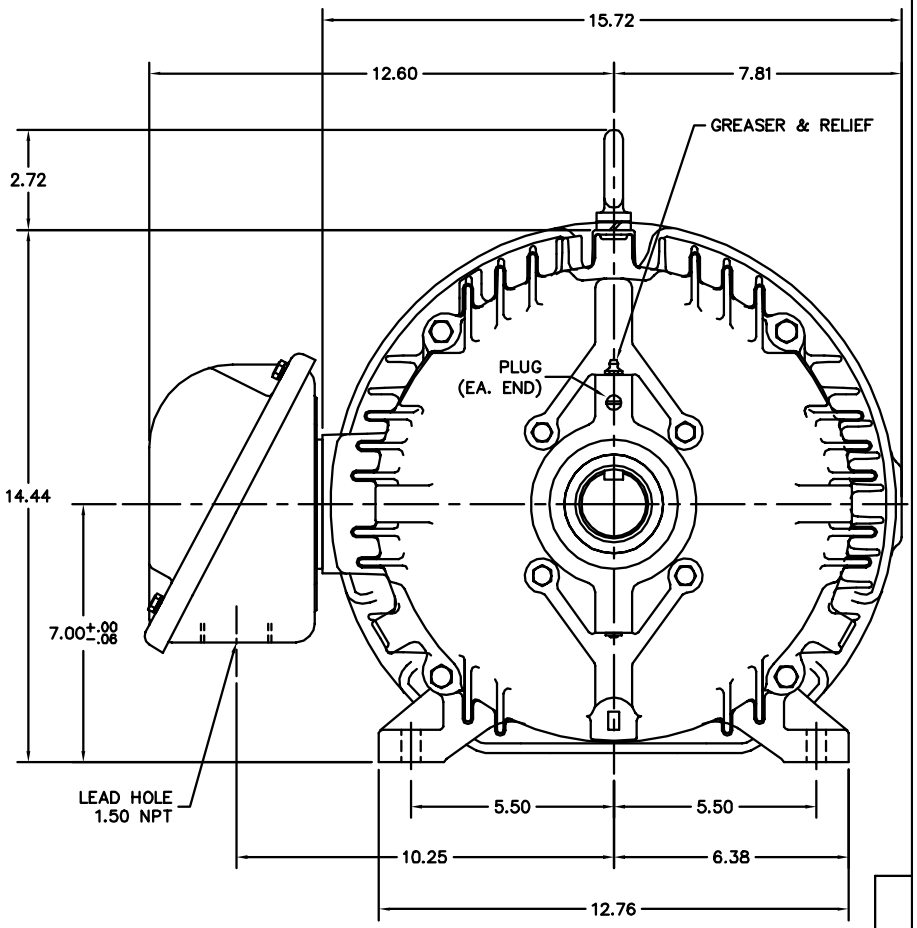

10LYH292

CUSTOMER IS RESPONSIBLE FOR DETERMINING THAT BALDOR'S PRODUCT WILL PERFORM SUITABLY IN THE INTENDED APPLICATION.

REV. DESC: ADDED GND HOLE TAP SIZE			BALDOR
REV. LTR: E	VERSION: 05	TDR: 000000954909	
FILE: \AAA\00174\594	REVISED: 02:43:43 12/07/2015	BY: ENNINDO	HORZ TEFC 284–6T ECP W/311 BRGS & PLS
MTL: –			SH 1 of 1