07LYK374

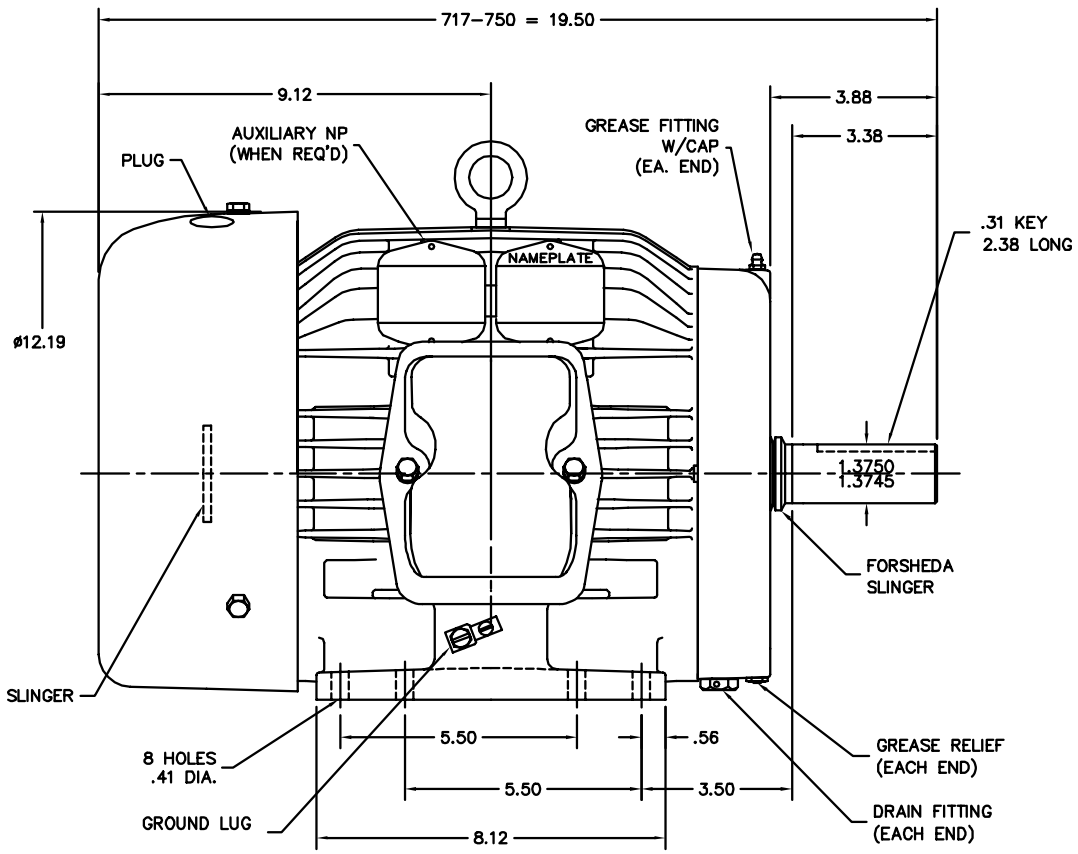

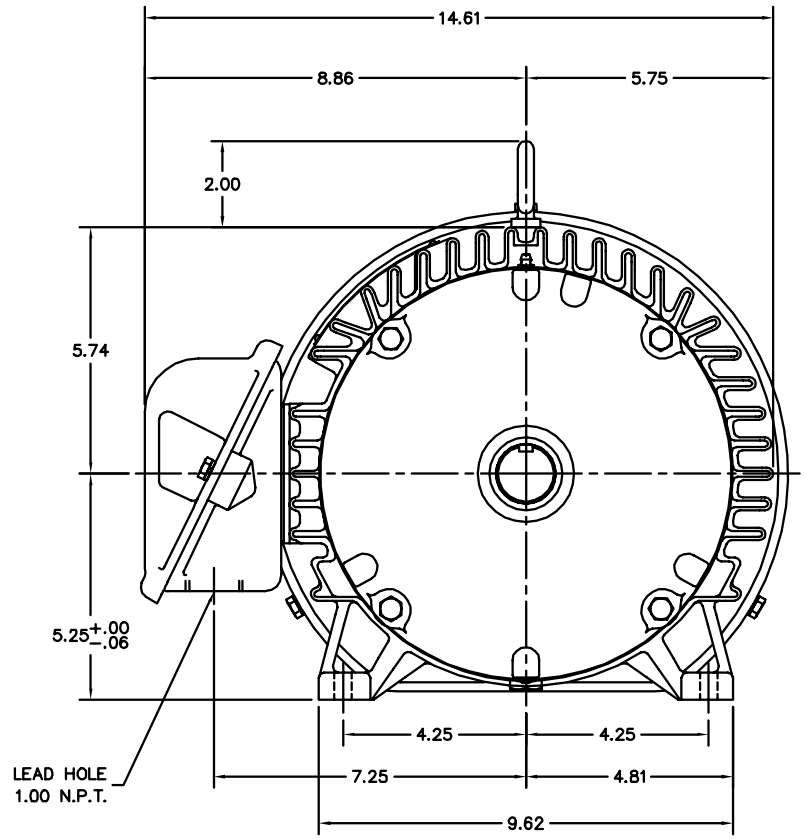

07LYK374

CUSTOMER IS RESPONSIBLE FOR DETERMINING THAT BALDOR'S PRODUCT WILL PERFORM SUITABLY IN THE INTENDED APPLICATION.

REV. DESC: CHANGE GDR LUG CALLOUT			BALDOR
REV. LTR: D	VERSION: 04	TDR: 000001033071	
FILE: \AAA\00139\080	REVISED: 08:07:27 06/26/2017	BY: USZAHAR	STD HORZ 213–5T TEFC M CP W/6307 BRGS, LIPPED KOBX LID
MTL: –			SH 1 of 1