06LYH483

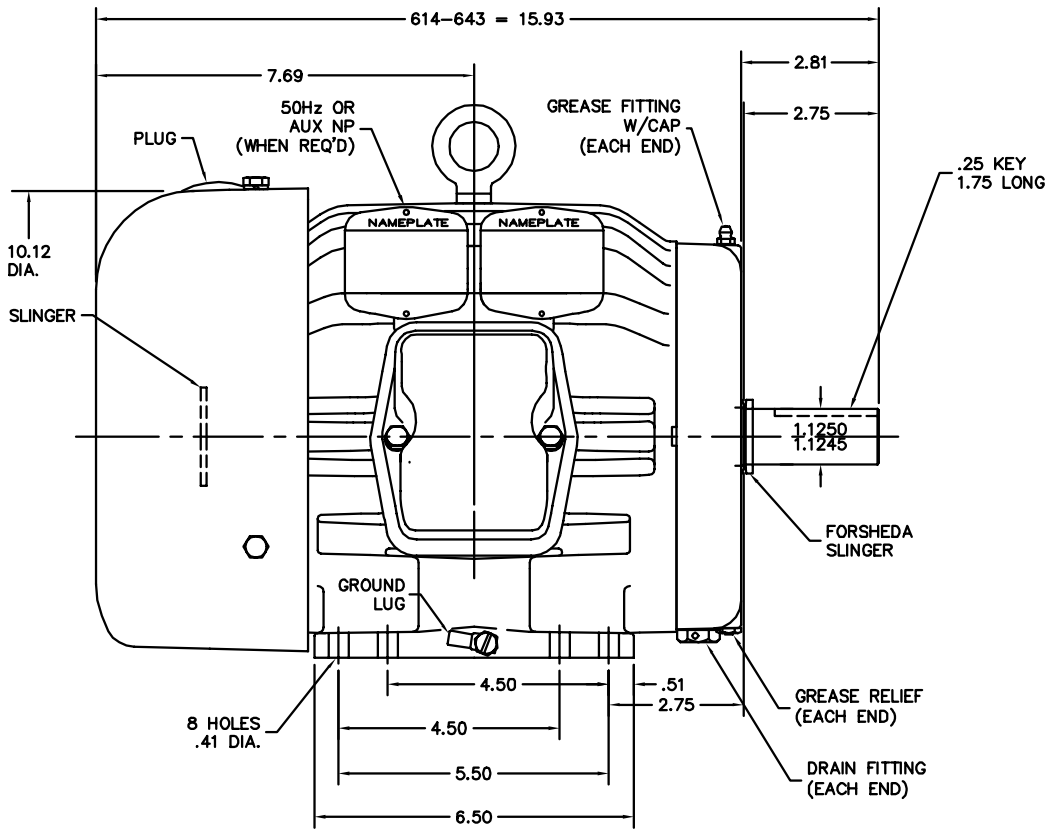

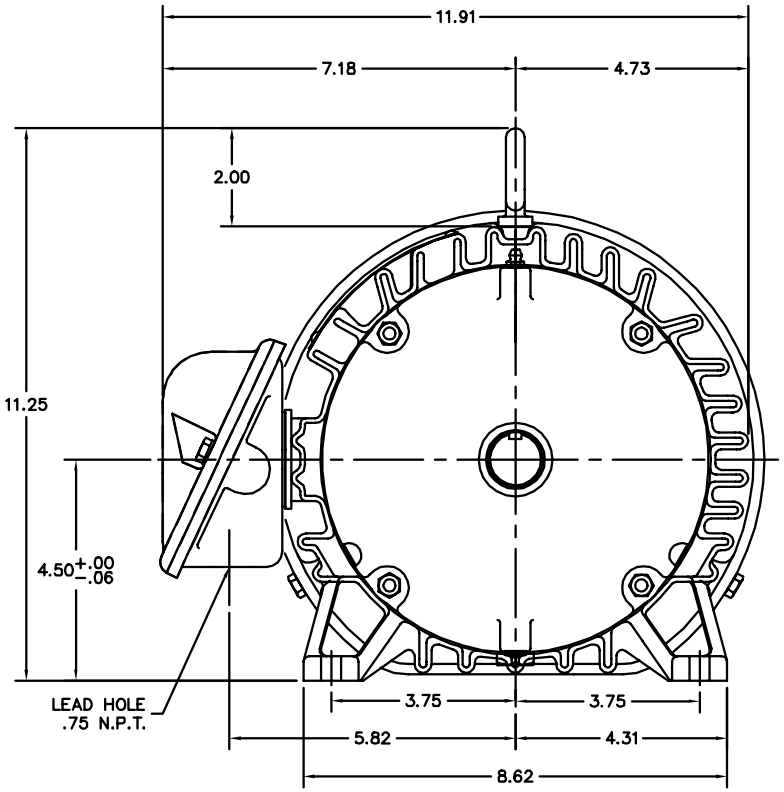

06LYH483

CUSTOMER IS RESPONSIBLE FOR DETERMINING THAT BALDOR'S PRODUCT WILL PERFORM SUITABLY IN THE INTENDED APPLICATION.

REV. DESC: UPDATE GRAPHICS TO 2 NP'S			BALDOR
REV. LTR: D	VERSION: 04	TDR: 000001062694	
FILE: \AAA\00139\049	REVISED: 03:44:36 03/01/2018	BY: ENBRAM0	STD HORZ 182–4T TEFC 06M CP W/ 6206 BRGS, LIPPED LID
MTL: –			SH 1 of 1