37LYJ859

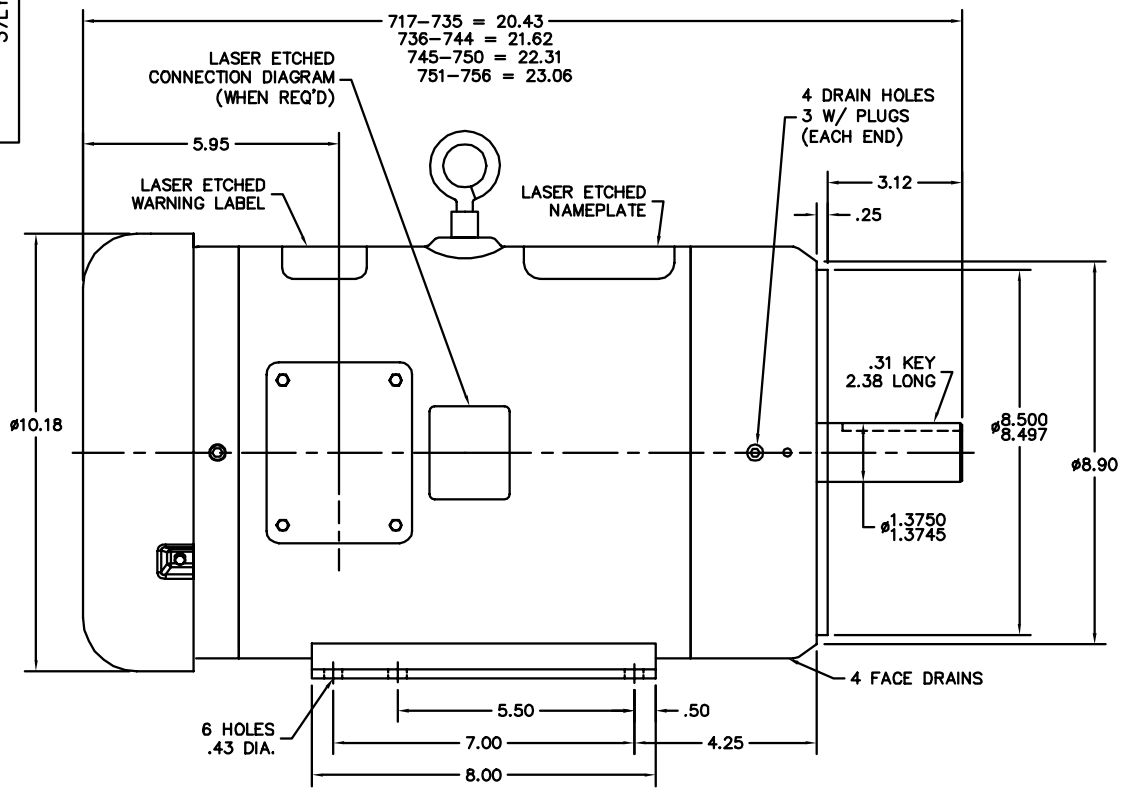

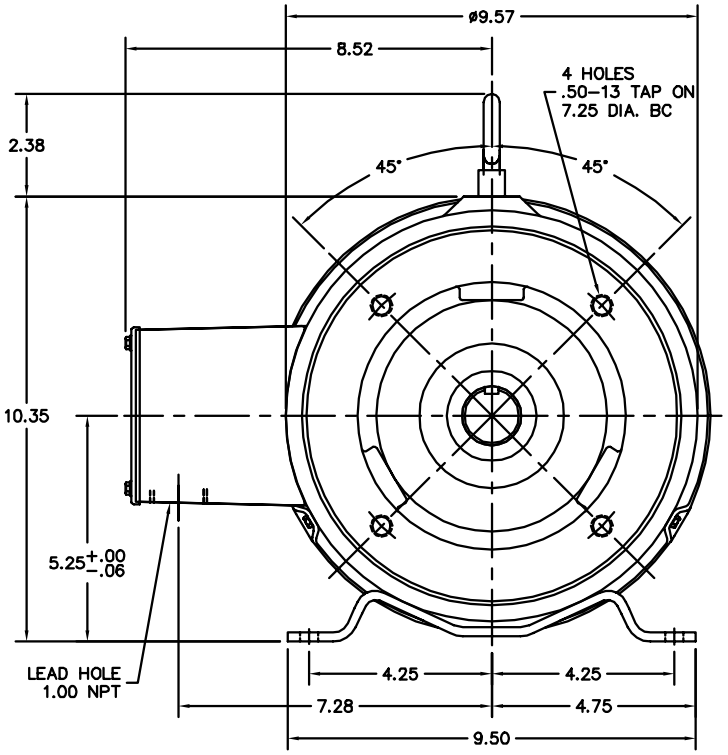

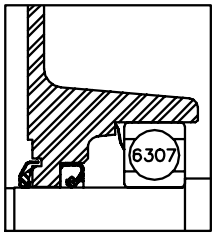

FRONT END DETAIL

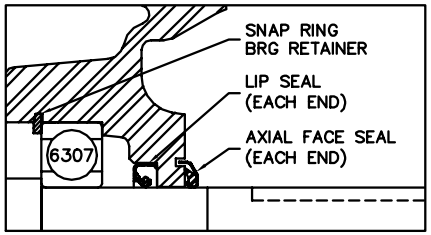

PULLEY END DETAIL

CUSTOMER IS RESPONSIBLE FOR DETERMINING THAT BALDOR'S PRODUCT WILL PERFORM SUITABLY IN THE INTENDED APPLICATION.

REV. DESC: REPLACE 37SB2001 W/37SB2810, 37SH1B25 W/37SH1V62			BALDOR
REV. LTR: D	VERSION: 04	TDR: 000001002845	
FILE: \AAA\00177\192	REVISED: 07:37:52 10/28/2016	BY: ENALEMO	STD HORZ 213–5TC TEFC 37M WD10
MTL: –			SH 1 of 1

37LYJ859