BALDOR® • RELIANCE

Product Information Packet

CSSEWDM3614T

2HP,1175RPM,3PH,60HZ,184TC,3646M,TEFC,F1

Copyright © All product information within this document is subject to ABB Motors and Mechanical Inc. copyright © protection, unless otherwise noted.

Part Detail

Revision:	N	**Status:**	INA/A	**Change #:**		**Proprietary:**	No
Type:	AC	**Elec. Spec:**	36WGS981	**CD Diagram:**	CD0005	**Mfg Plant:**	
Mech. Spec:	36G560	**Layout:**	36LYG560	**Poles:**	06	**Created Date:**	08-01-2012
Base:	RG	**Eff. Date:**	05-01-2018	**Leads:**	9#16		

Specs

Catalog Number:	CSSEWDM3614T	**Insulation Class:**	H
Enclosure:	TEFC	**Inverter Code:**	Inverter Ready
Frame:	184TC	**KVA Code:**	M
Frame Material:	Stainless Steel	**Lifting Lugs:**	Standard Lifting Lugs
Output @ Frequency:	2.000 HP @ 60 HZ	**Locked Bearing Indicator:**	Locked Bearing
Synchronous Speed @ Frequency:	1200 RPM @ 60 HZ	**Motor Lead Quantity/Wire Size:**	9 @ 16 AWG
Voltage @ Frequency:	230.0 V @ 60 HZ	**Motor Lead Exit:**	Ko Box
	460.0 V @ 60 HZ	**Motor Lead Termination:**	Flying Leads
XP Class and Group:	None	**Motor Type:**	3646M
XP Division:	Not Applicable	**Mounting Arrangement:**	F1
Agency Approvals:	UR	**Power Factor:**	61
	CSA	**Product Family:**	Washdown All Stainless
Auxillary Box:	No Auxillary Box	**Pulley End Bearing Type:**	Sealed Bearing
Auxillary Box Lead Termination:	None	**Pulley Face Code:**	C-Face
Base Indicator:	Rigid	**Pulley Shaft Indicator:**	Standard
Bearing Grease Type:	Polyrex EM (-20F +300F)	**Rodent Screen:**	None
Blower:	None	**Shaft Extension Location:**	Pulley End
Current @ Voltage:	3.500 A @ 460.0 V	**Shaft Ground Indicator:**	No Shaft Grounding

	7.000 A @ 230.0 V
Design Code:	A
Drip Cover:	No Drip Cover
Duty Rating:	CONT
Electrically Isolated Bearing:	Not Electrically Isolated
Feedback Device:	NO FEEDBACK
Front Face Code:	Standard
Front Shaft Indicator:	None
Heater Indicator:	No Heater

Shaft Rotation:	Reversible
Shaft Slinger Indicator:	Shaft Slinger
Speed Code:	Single Speed
Motor Standards:	NEMA
Starting Method:	Direct on line
Thermal Device - Bearing:	NONE (OLD)
Thermal Device - Winding:	None
Vibration Sensor Indicator:	No Vibration Sensor
Winding Thermal 1:	None
Winding Thermal 2:	None

Nameplate NP1953B01

CAT.NO.	CSSEWDM3614T						
SPEC.	36G560S981G1						
HP	2						
VOLTS	230/460						
AMP	7/3.5						
RPM	1175						
FRAME	184TC	HZ	60			PH	3
SER.F.	1.15	CODE	M	DES	A	CLASS	H
NEMA-NOM-EFF	88.5	PF	61				
RATING	40C AMB-CONT						
CC	010A	USABLE AT 208V					
DE	6206	ODE	6206				
ENCL	TEFC	SN					

Parts List

Part Number	Description	Quantity
SA248753	SA 36G560S981G1	1.000 EA
RA235621	RA 36G560S981G1	1.000 EA
36FN3000A01SP	EXFN, PLASTIC, 7.00 OD, .912 ID	1.000 EA
11XW1032G06	10-32 X .38, TAPTITE II, HEX WSHR SLTD U	1.000 EA
HW3001B01	BRASS CUP WASHER, FOR #10 SCREW	1.000 EA
36FE1912A05	FREP TEFC 206 BRG (STAINLESS)	1.000 EA
RM1070A42	O-RING,(#70-7.239) VITON .070X7.239	1.000 EA
HW4600F25	30 X 48 X 4.5 AFX SEAL, GRAPHITE INFUSED	1.000 EA
HW4500A33	1/8 NPT STAINLESS,HOLO-KROME #13002,PRES	3.000 EA
HW5100A06	W2420-025 WVY WSHR (WB)	1.000 EA
36PE1913A03	PUEP 182-4TC ENCL 206 BRG (STAINLESS)	1.000 EA
RM1070A42	O-RING,(#70-7.239) VITON .070X7.239	1.000 EA
HW4600F25	30 X 48 X 4.5 AFX SEAL, GRAPHITE INFUSED	1.000 EA
HW4500A33	1/8 NPT STAINLESS,HOLO-KROME #13002,PRES	3.000 EA
RM1070A14	O-RING, -010 VITON/FKM .070CS X .239ID	4.000 EA
51XB1214A16	12-14X1.00 HXWSSLD SERTYB	1.000 EA
36FH4007	FAN COVER #304 STAINLESS W/OUT GREASER	1.000 EA
10XN1032S06	HEX HD CAP SCREW, SS	3.000 EA
36CB4517	LIPPED CB LID #304 STAINLESS - CLEANED	1.000 EA
37GS3010SP	1/16"WHITE LID GASKET	1.000 EA
59XN0832S07	8/32 X 7/16 HX WS HD SER X	4.000 EA
HW2502E16	#303 SS,SQ KEY 1/4 X 1.750	1.000 EA
HA7000A02	KEY RETAINER RING, 1 1/8 DIA, 1 3/8 DIA	1.000 EA
MJ5001A27	32220KN GRAY SEALER *MIN BUY 4 QTS=1GAL	0.005 QT

Parts List (continued)

Part Number	Description	Quantity
MJ5004A37	#76732 LOCTITE ANTISEIZE THRD COMPOUND	0.005 EA
HA5027A02	HA4054 T-DRAIN X2 BAGGED WITH LABEL	1.000 EA
HW3200S01	EYEBOLT 3/8-16 X3/4 S.S. TDR #35988	1.000 EA
MJ1000A02	GREASE, POLYREX EM EXXON (USe 4824-15A)	0.050 LB
WD5603A01	KIT, CLOSED-END LEAD SPLICE (18-14GA)	1.000 EA
HA3101S29	THRUBOLT- 1/4-20X13.00 SS	4.000 EA
G0PA1000	PKG GRP, PRINT PK1026A06	1.000 EA
MN416A01	TAG-INSTAL-MAINT no wire (1200/bx) 5/18	1.000 EA
HA5027A07	85XU1208S08 FACE DRAIN PINS BAGGED	1.000 EA

AC Induction Motor Performance Data

Record # 39970 - Typical performance - not guaranteed values

Winding: 36WGS981-R002	**Type:** 3646M	**Enclosure:** TEFC

Nameplate Data				460 V, 60 Hz: High Voltage Connection	
Rated Output (HP)	2			Full Load Torque	8.95 LB-FT
Volts	230/460			Start Configuration	direct on line
Full Load Amps	7/3.5			Breakdown Torque	37.7 LB-FT
R.P.M.	1175			Pull-up Torque	23.3 LB-FT
Hz	60	Phase	3	Locked-rotor Torque	29.7 LB-FT
NEMA Design Code	A	KVA Code	M	Starting Current	26 A
Service Factor (S.F.)	1.15			No-load Current	2.38 A
NEMA Nom. Eff.	88.5	Power Factor	61	Line-line Res. @ 25ºC	4.4007 Ω
Rating - Duty	40C AMB-CONT			Temp. Rise @ Rated Load	36°C
S.F. Amps				Temp. Rise @ S.F. Load	42°C

Load Characteristics 460 V, 60 Hz, 2 HP

% of Rated Load	25	50	75	100	125	150	S.F.
Power Factor	25	41	53	61	67	71	65
Efficiency	76.6	85.2	87.7	88.5	88.3	87.6	88.4
Speed	1194.5	1188.5	1182.4	1175.9	1168.8	1160.6	1172
Line amperes	2.47	2.71	3.04	3.46	3.95	4.52	3.75

Performance Graph at 460V, 60Hz, 2.0HP Typical performance - Not guaranteed values

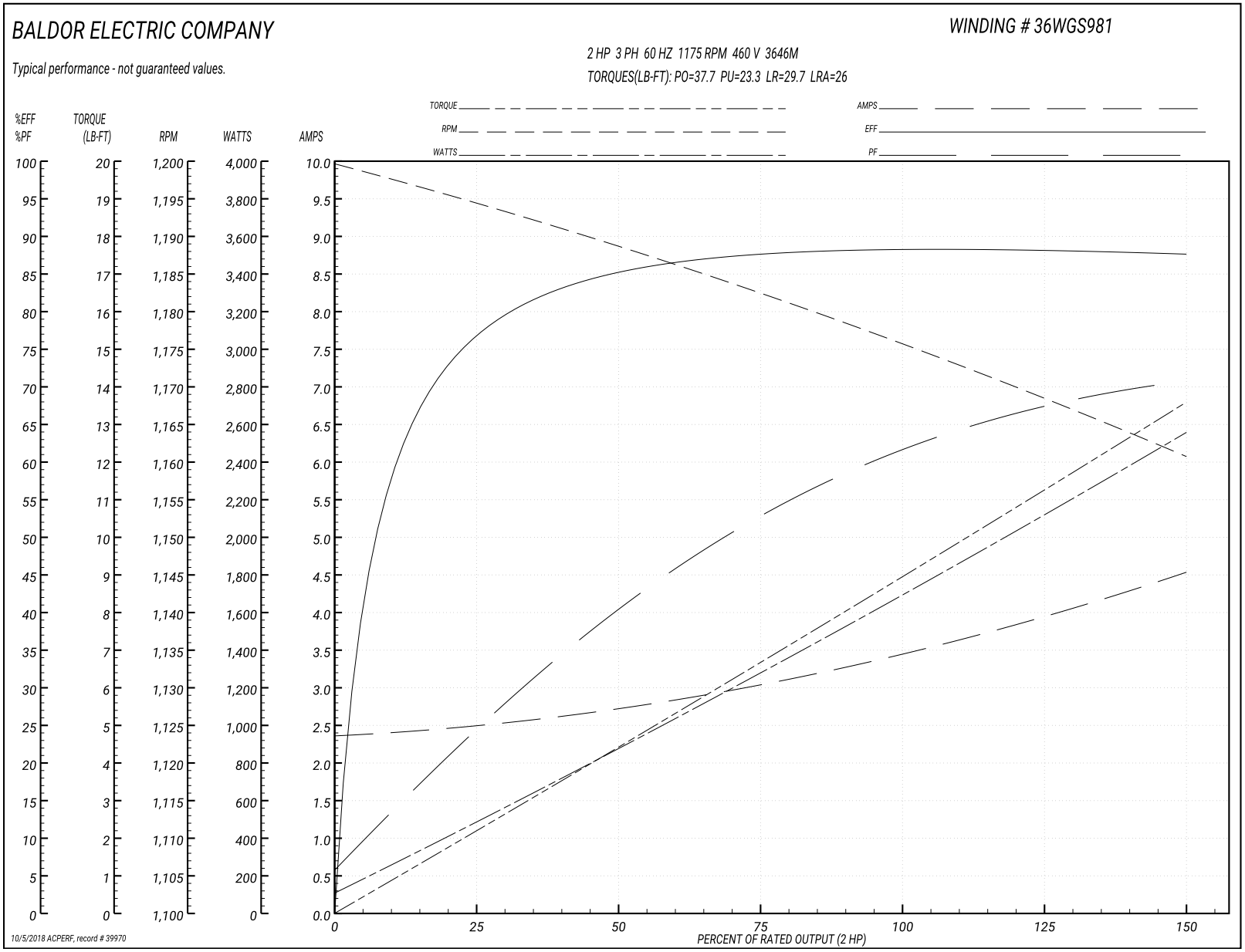

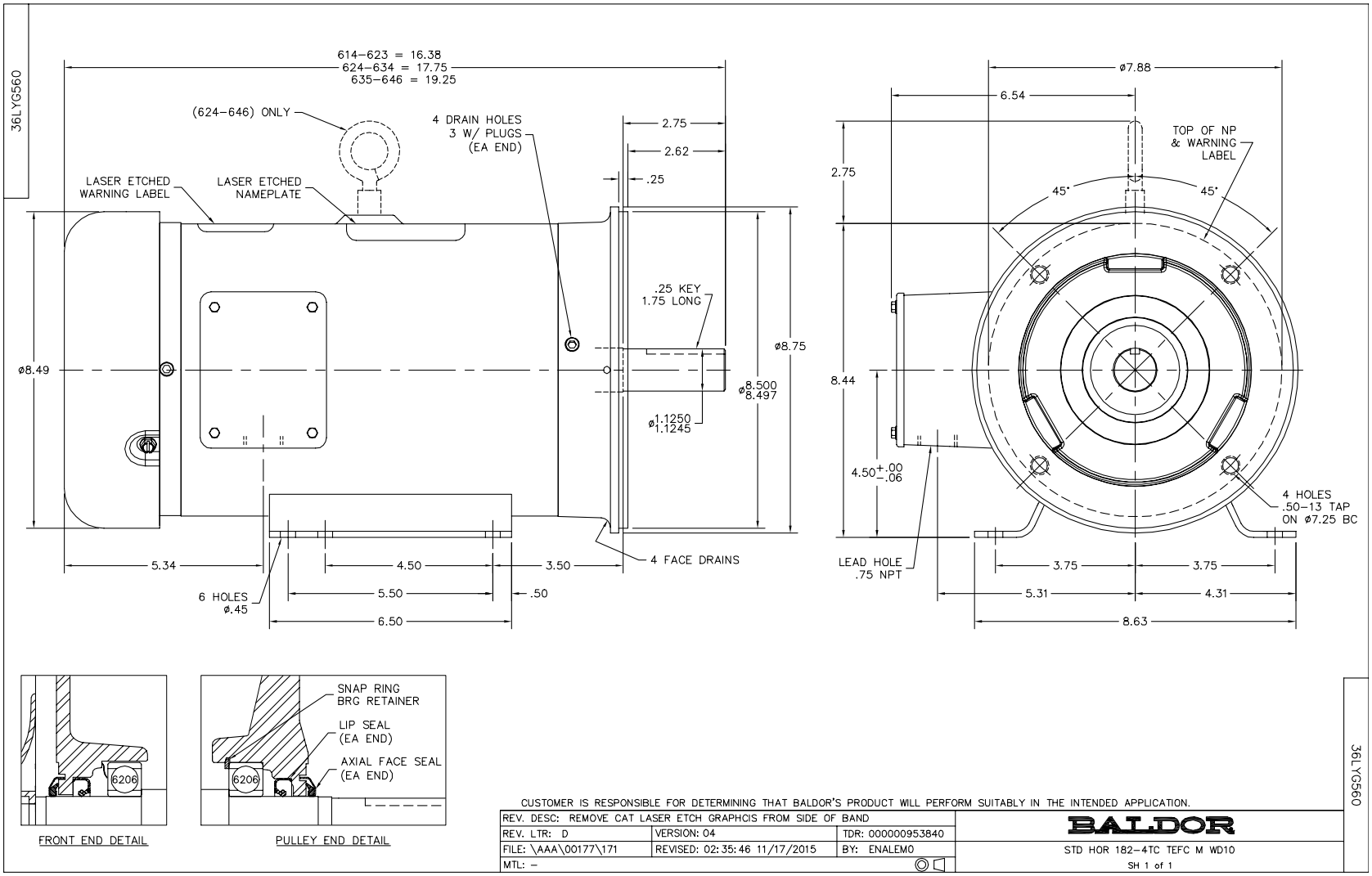
36LYG560
614–623 = 16.38
624–634 = 17.75
635–646 = 19.25
(624–646) ONLY
4 DRAIN HOLES
3 W/ PLUGS
(EA END)
LASER ETCHED
WARNING LABEL
LASER ETCHED
NAMEPLATE
2.75
2.62
.25
.25 KEY
1.75 LONG
ø8.49
ø8.75
ø8.500
ø8.497
ø1.1250
1.1245
5.34
4.50
3.50
4 FACE DRAINS
6 HOLES
ø.45
5.50
.50
6.50
ø7.88
6.54
TOP OF NP
& WARNING
LABEL
45°
45°
2.75
8.44
4.50+.00 −.06
LEAD HOLE
.75 NPT
4 HOLES
.50–13 TAP
ON ø7.25 BC
3.75
3.75
5.31
4.31
8.63
6206
6206
SNAP RING
BRG RETAINER
LIP SEAL
(EA END)
AXIAL FACE SEAL
(EA END)
FRONT END DETAIL
PULLEY END DETAIL
CUSTOMER IS RESPONSIBLE FOR DETERMINING THAT BALDOR'S PRODUCT WILL PERFORM SUITABLY IN THE INTENDED APPLICATION.
REV. DESC: REMOVE CAT LASER ETCH GRAPHCIS FROM SIDE OF BAND
REV. LTR: D
VERSION: 04
TDR: 000000953840
FILE: \AAA\00177\171
REVISED: 02:35:46 11/17/2015
BY: ENALEMO
MTL: –
BALDOR
STD HOR 182–4TC TEFC M WD10
SH 1 of 1
36LYG560

CD0005

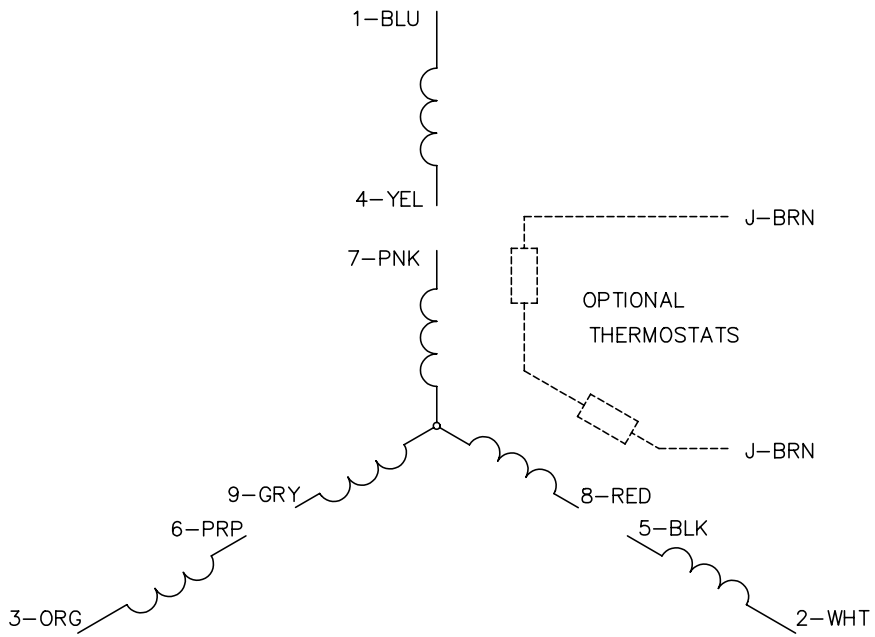

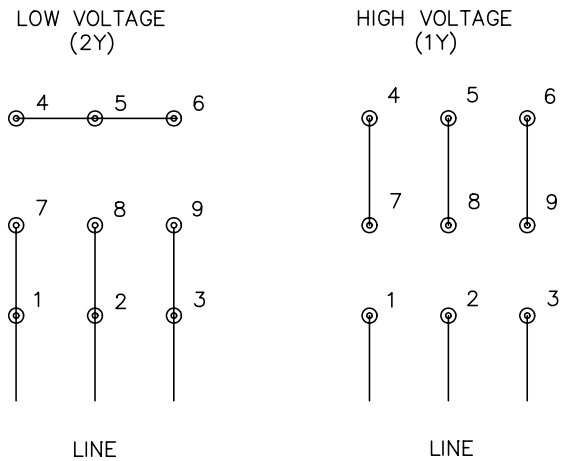

NOTES:

1. INTERCHANGE ANY TWO LINE LEADS TO REVERSE ROTATION.
2. OPTIONAL THERMOSTATS ARE PROVIDED WHEN SPECIFIED.
3. ACTUAL NUMBER OF INTERNAL PARALLEL CIRCUITS MAY BE A MULTIPLE OF THOSE SHOWN ABOVE.
4. LEAD COLORS ARE OPTIONAL. LEADS MUST ALWAYS BE NUMBERED AS SHOWN.

REV. DESC: REVISE TO SHOW OPTIONAL COLORS			
REV. LTR: E	BY: JLP	REVISED: 01/19/99 10:15	TDR: 0171435
CD0005		FILE: AAA00005140	MDL: –
		MTL: –	

BALDOR ELECTRIC Co.

3PH, DV, 9 LEADS

CD0005