BALDOR® • RELIANCE

Product Information Packet

CEM3584T-5

1.5HP,1765RPM,3PH,60HZ,145TC,0526M,TEFC

Copyright © All product information within this document is subject to ABB Motors and Mechanical Inc. copyright © protection, unless otherwise noted.

Part Detail

Revision:	F	**Status:**	PRD/A	**Change #:**		**Proprietary:**	No
Type:	AC	**Elec. Spec:**	05WGX250	**CD Diagram:**	CD0006	**Mfg Plant:**	
Mech. Spec:	05C052	**Layout:**	05LYC052	**Poles:**	04	**Created Date:**	05-15-2012
Base:	RG	**Eff. Date:**	02-02-2017	**Leads:**	3#18		

Specs

Catalog Number:	CEM3584T-5	**Inverter Code:**	Inverter Ready
Enclosure:	TEFC	**KVA Code:**	M
Frame:	145TC	**Lifting Lugs:**	No Lifting Lugs
Frame Material:	Iron	**Locked Bearing Indicator:**	Locked Bearing
Output @ Frequency:	1.500 HP @ 60 HZ	**Motor Lead Quantity/Wire Size:**	3 @ 18 AWG
Synchronous Speed @ Frequency:	1800 RPM @ 60 HZ	**Motor Lead Exit:**	Ko Box
Voltage @ Frequency:	575.0 V @ 60 HZ	**Motor Lead Termination:**	Flying Leads
XP Class and Group:	None	**Motor Type:**	0526M
XP Division:	Not Applicable	**Mounting Arrangement:**	F1
Agency Approvals:	CSA	**Power Factor:**	71
	CSA EEV	**Product Family:**	General Purpose
	UR	**Pulley End Bearing Type:**	Ball
Auxillary Box:	No Auxillary Box	**Pulley Face Code:**	C-Face
Auxillary Box Lead Termination:	None	**Pulley Shaft Indicator:**	Standard
Base Indicator:	Rigid	**Rodent Screen:**	None
Bearing Grease Type:	Polyrex EM (-20F +300F)	**Shaft Extension Location:**	Pulley End
Blower:	None	**Shaft Ground Indicator:**	No Shaft Grounding
Current @ Voltage:	1.800 A @ 575.0 V	**Shaft Rotation:**	Reversible

Design Code:	B	**Shaft Slinger Indicator:**	No Slinger
Drip Cover:	No Drip Cover	**Speed Code:**	Single Speed
Duty Rating:	CONT	**Motor Standards:**	NEMA
Electrically Isolated Bearing:	Not Electrically Isolated	**Starting Method:**	Direct on line
Feedback Device:	NO FEEDBACK	**Thermal Device - Bearing:**	NONE (OLD)
Front Face Code:	Standard	**Thermal Device - Winding:**	None
Front Shaft Indicator:	None	**Vibration Sensor Indicator:**	No Vibration Sensor
Heater Indicator:	No Heater	**Winding Thermal 1:**	None
Insulation Class:	F	**Winding Thermal 2:**	None

Nameplate NP3441L

CAT.NO.	CEM3584T-5						
SPEC.	05C052X250G1						
HP	1.5						
VOLTS	575						
AMP	1.8						
RPM	1765						
FRAME	145TC	HZ	60			PH	3
SER.F.	1.15	CODE	M	DES	B	CL	F
NEMA-NOM-EFF	86.5	PF	71				
RATING	40C AMB-CONT						
CC	010A	USABLE AT 208V					
DE	6205	ODE	6203				
ENCL	TEFC	SN					
VPWM INVERTER READY							
CT6-60H(10:1)VT3-60H(20:1							

Parts List

Part Number	Description	Quantity
SA244910	SA 05C052X250G1	1.000 EA
RA231797	RA 05C052X250G1	1.000 EA
34FN3002B01	EXTERNAL FAN, PLASTIC, .637/.639 HUB W/	1.000 EA
06CB3000	BALDOR CONDUIT BOX CAST	1.000 EA
06GS1000	GASKET,CONDUIT BOX	1.000 EA
51XW2520A12	SCREW, HEX SER SLT HD, ZN, 1/4-20 X .75	2.000 EA
51XW2520A12	.25-20 X .75, TAPTITE II, HEX WSHR SLTD	2.000 EA
11XW1032G06	10-32 X .38, TAPTITE II, HEX WSHR SLTD U	1.000 EA
HW3001B01	BRASS CUP WASHER, FOR #10 SCREW	1.000 EA
35EP1100A02	FR ENDPLATE, TEFC W/GREASER	1.000 EA
HW4500A01	1641B(ALEMITE)400 UNIV, GREASE FITT	1.000 EA
HW5100A03	WAVY WASHER (W1543-017)	1.000 EA
35EP1329A01	PU EP ENCL 143-5TC 205 BRG W/GRSR & STD	1.000 EA
HW4500A01	1641B(ALEMITE)400 UNIV, GREASE FITT	1.000 EA
51XN1032A20	10-32 X 1 1/4 HX WS SL SR	2.000 EA
HA3100A28	THRUBOLT 10-32 X 8.187	4.000 EA
51XB1214A16	12-14X1.00 HXWSSLD SERTYB	1.000 EA
35FH4005A02	IEC FH W/GREASER - W/PRIMER	1.000 EA
51XW1032A06	10-32 X .38, TAPTITE II, HEX WSHR SLTD S	3.000 EA
06CB3500	BALDOR CONDUIT BOX LID	1.000 EA
06GS1001	BALDOR CONDUIT BOX GASKET	1.000 EA
HW2501D13	KEY, 3/16 SQ X 1.375	1.000 EA
HA7000A01	KEY RETAINER 7/8" DIA SHAFT	1.000 EA
85XU0407S04	4X1/4 U DRIVE PIN STAINLESS	2.000 EA

Parts List (continued)

Part Number	Description	Quantity
MJ1000A02	GREASE, POLYREX EM EXXON (USe 4824-15A)	0.050 LB
MG1000Y03	MUNSELL 2.53Y 6.70/ 4.60, GLOSS 20,	0.017 GA
LB1119N	WARNING LABEL	1.000 EA
LC0006	CONNECTION LABEL	1.000 EA
NP3441L	ALUM SUPER-E VPWM INVERTER READY UL	1.000 EA
36PA1000	PKG GRP, PRINT PK1016A06	1.000 EA
MN416A01	TAG-INSTAL-MAINT no wire (1200/bx) 5/18	1.000 EA

AC Induction Motor Performance Data

Record # 38408 - Typical performance - not guaranteed values

Winding: 05WGX250-R001	**Type:** 0526M	**Enclosure:** TEFC

Nameplate Data				575 V, 60 Hz: Single Voltage Motor	
Rated Output (HP)	1.5			Full Load Torque	4.54 LB-FT
Volts	575			Start Configuration	direct on line
Full Load Amps	1.8			Breakdown Torque	21.6 LB-FT
R.P.M.	1765			Pull-up Torque	12.3 LB-FT
Hz	60	Phase	3	Locked-rotor Torque	15 LB-FT
NEMA Design Code	B	KVA Code	M	Starting Current	16.5 A
Service Factor (S.F.)	1.15			No-load Current	1.23 A
NEMA Nom. Eff.	86.5	Power Factor	71	Line-line Res. @ 25ºC	14.4 Ω
Rating - Duty	40C AMB-CONT			Temp. Rise @ Rated Load	34°C
S.F. Amps				Temp. Rise @ S.F. Load	40°C

Load Characteristics 575 V, 60 Hz, 1.5 HP

% of Rated Load	25	50	75	100	125	150	S.F.
Power Factor	31	50	62	71	77	80	75
Efficiency	74.7	83.2	85.8	86.9	86.6	86	86.7
Speed	1792	1783	1774	1764	1754	1743	1758
Line amperes	1.28	1.41	1.62	1.85	2.15	2.47	2.03

Performance Graph at 575V, 60Hz, 1.5HP Typical performance - Not guaranteed values

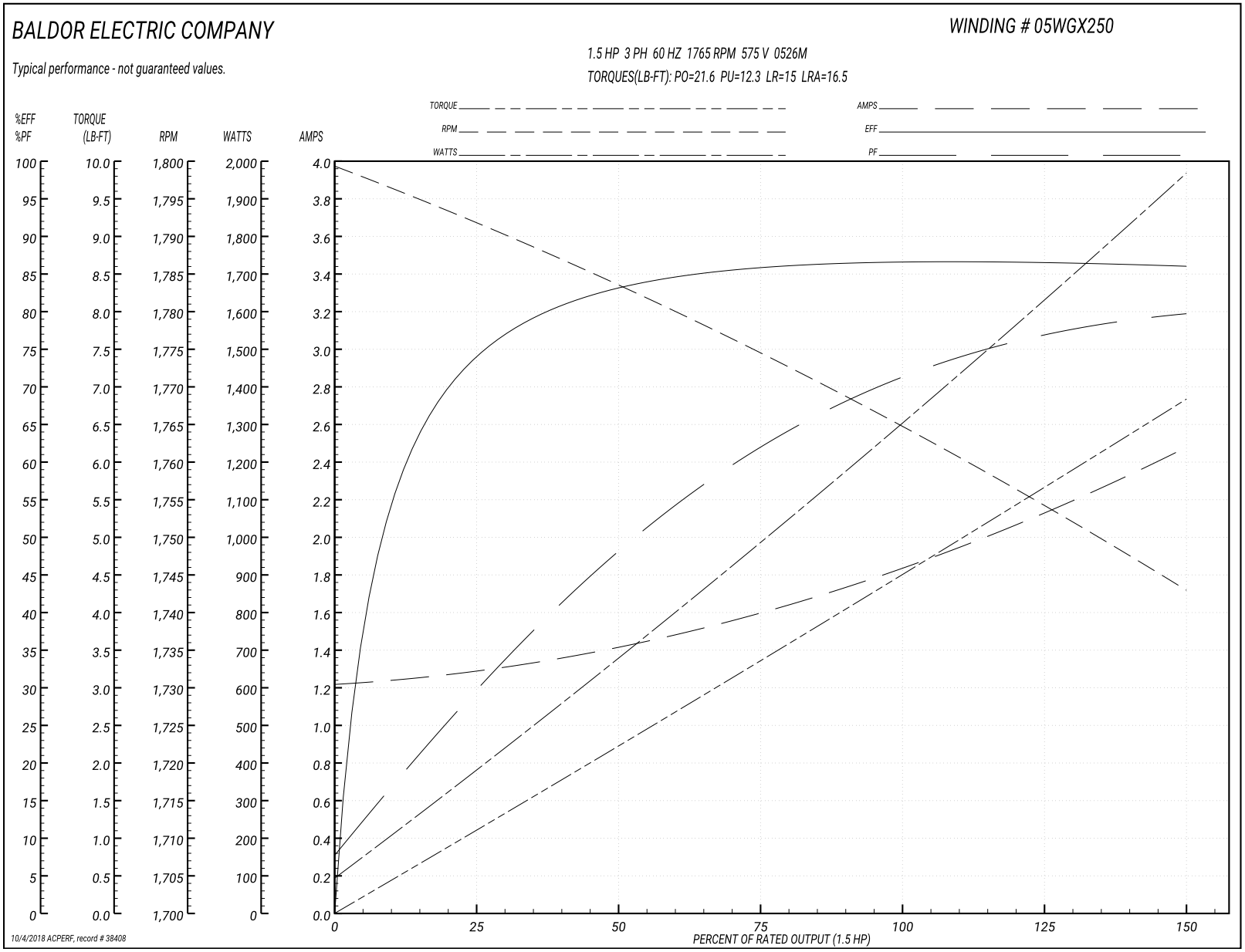

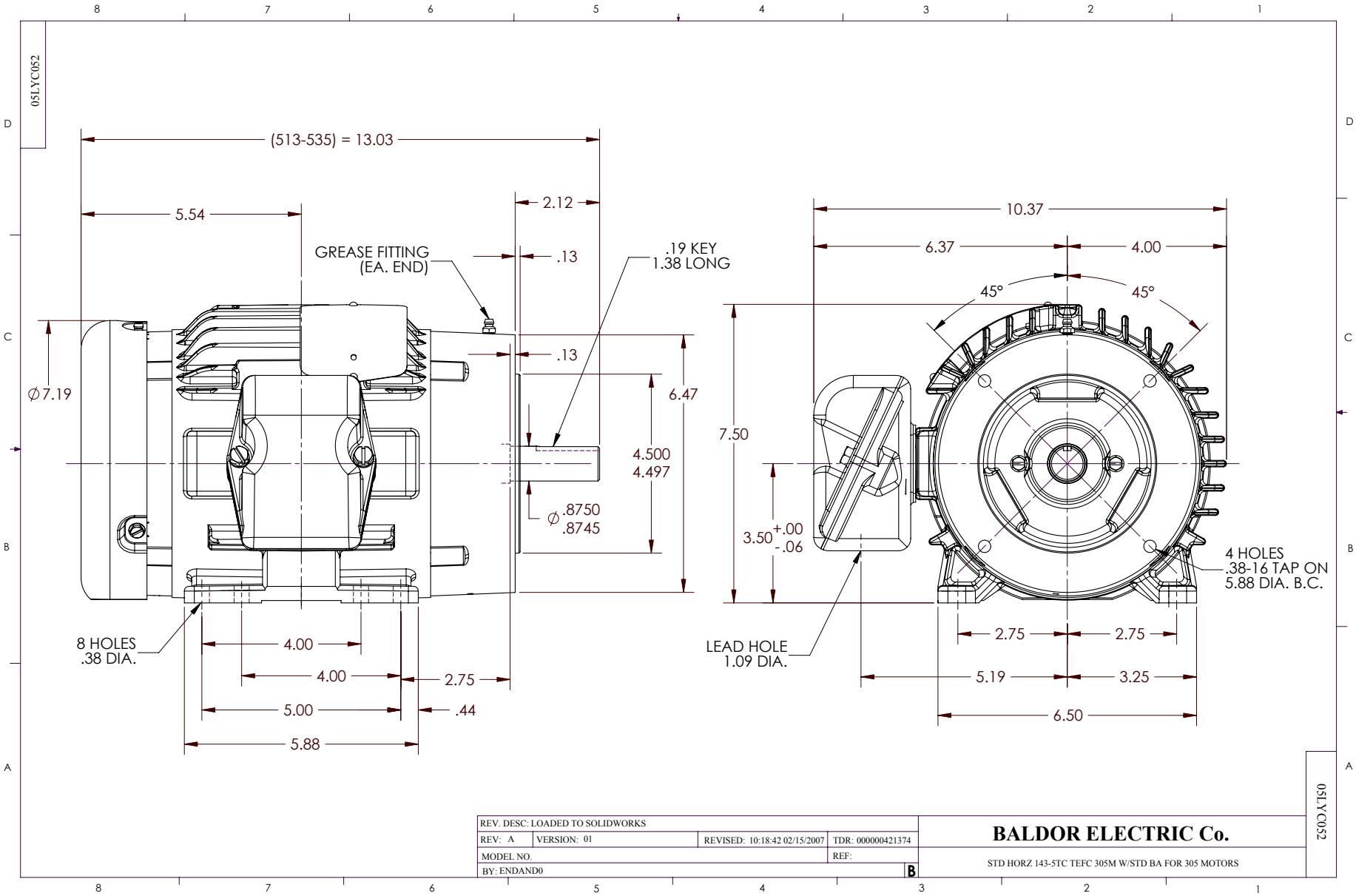
05LYC052
(513-535) = 13.03
5.54
2.12
GREASE FITTING
(EA. END)
.13
.19 KEY
1.38 LONG
.13
∅7.19
6.47
4.500
4.497
∅.8750
.8745
8 HOLES
.38 DIA.
4.00
4.00
2.75
5.00
.44
5.88
10.37
6.37
4.00
45°
45°
7.50
3.50 +.00 -.06
4 HOLES
.38-16 TAP ON
5.88 DIA. B.C.
LEAD HOLE
1.09 DIA.
2.75
2.75
5.19
3.25
6.50
REV. DESC: LOADED TO SOLIDWORKS
REV: A
VERSION: 01
REVISED: 10:18:42 02/15/2007
TDR: 000000421374
MODEL NO.
REF:
BY: ENDAND0
B
BALDOR ELECTRIC Co.
STD HORZ 143-5TC TEFC 305M W/STD BA FOR 305 MOTORS
05LYC052

CD0006

TYPICAL WYE–CONNECTED MOTOR

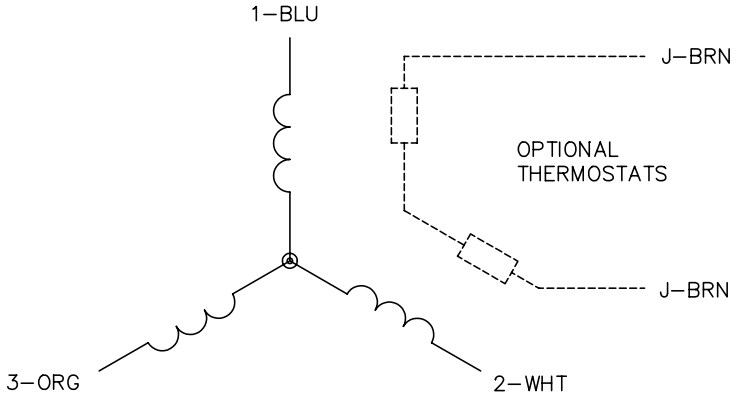

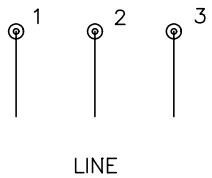

TYPICAL DELTA–CONNECTED MOTOR

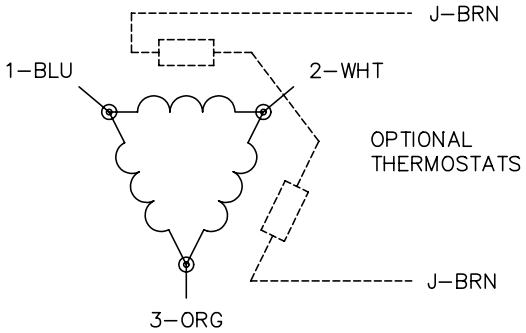

NOTES:

1. THREE LEAD MOTOR MAY BE EITHER WYE CONNECTED OR DELTA CONNECTED.
2. INTERCHANGE ANY TWO LINE LEADS TO REVERSE ROTATION.
3. OPTIONAL THERMOSTATS ARE PROVIDED WHEN SPECIFIED.
4. ACTUAL NUMBER OF INTERNAL PARALLEL CIRCUITS MAY VARY.
5. LEAD COLORS ARE OPTIONAL. LEADS MUST BE NUMBERED AS SHOWN.

REV. DESC: REVISE TO SHOW OPTIONAL COLORS			
REV. LTR: D	BY: JLP	REVISED: 01/21/99 4:02	TDR: 0171435
CD0006		FILE: AAA00005141	MDL: –
		MTL: –	

BALDOR ELECTRIC Co.

3PH, SV, 3 LEADS, WYE OR DELTA CONNECTED

CD0006