09LYC102

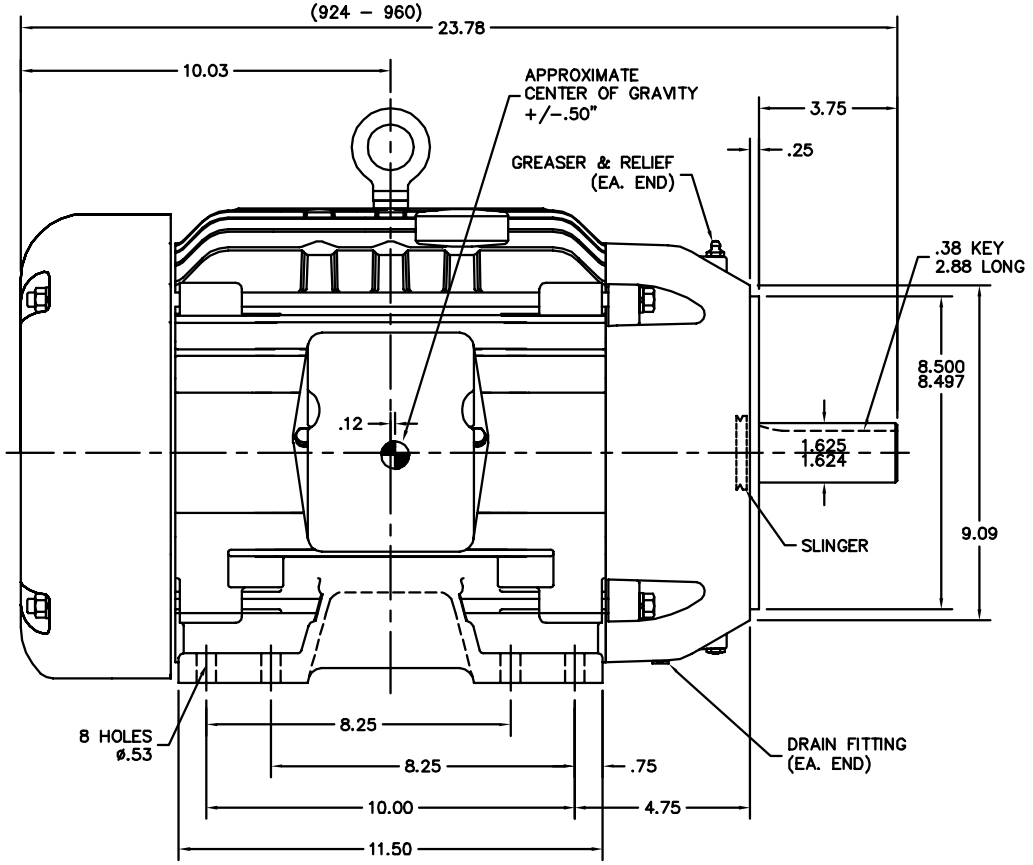


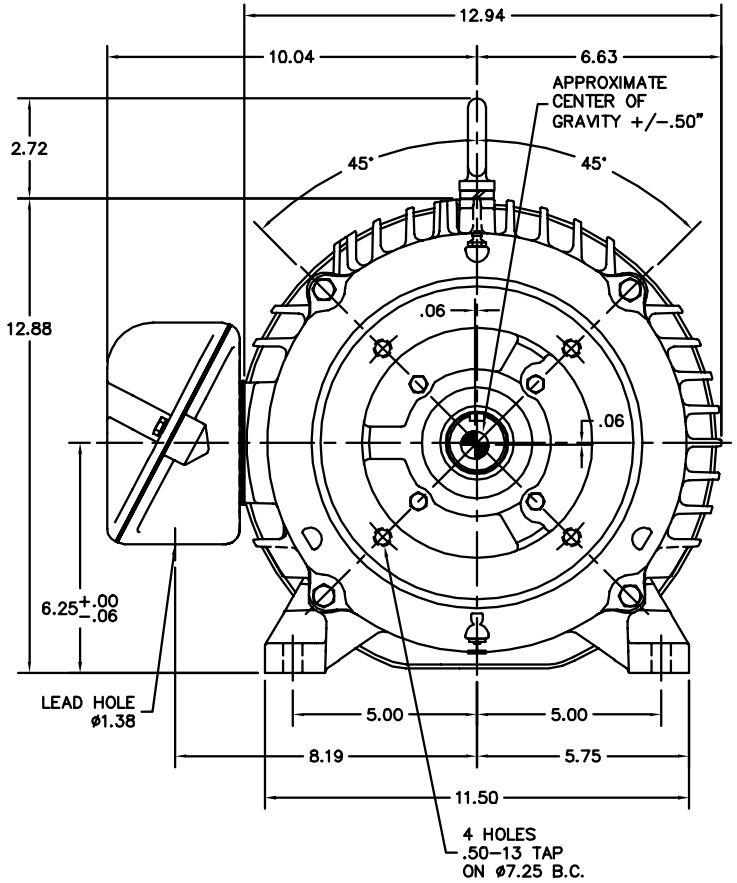


09LYC102

CUSTOMER IS RESPONSIBLE FOR DETERMINING THAT BALDOR'S PRODUCT WILL PERFORM SUITABLY IN THE INTENDED APPLICATION.

| | | | |
|---|---|---|---|
| REV. DESC: ADD TO 60 STACK | | | BALDOR |
| REV. LTR: S | VERSION: 08 | TDR: 000001046842 | |
| FILE: \AAA\00000\419 | REVISED: 04:25:36 10/16/2017 | BY: ENBRISO | HORZ TEFC 254–6TC |
| MTL: – | | | SH 1 of 1 |