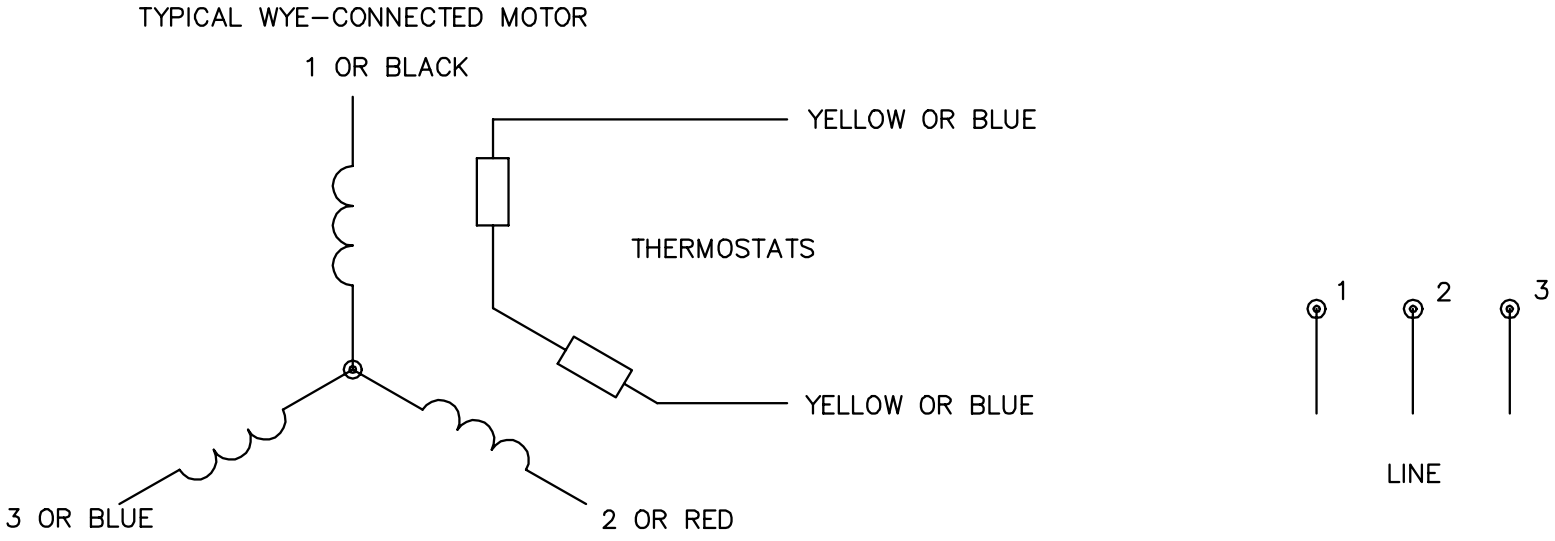

NOTES:

1. INTERCHANGE ANY TWO LINE LEADS TO REVERSE ROTATION.

2. ACTUAL NUMBER OF INTERNAL PARALLEL CIRCUITS MAY VARY.

REV. DESC: REMOVED "OPTIONAL" FROM PRINT, SERVO REQ'S T'STATS			BALDOR ELECTRIC Co.
REV. LTR: D	VERSION: 03	TDR: 000000414937	
CD0006A02	FILE: \AAA\00068\606	REVISED: 10:02:28 11/21/2006	3PH, SV, 3 LEADS, WYE CONNECTED
	MTL: –	BY: ENJEFDO	

CD0006A02