SQUARE D®

Instruction Sheet
30072-008-42-A
May, 1979

ELECTRICAL INTERLOCK

CLASS 9999, TYPE R35 OR R36

For use with Class 9422, Type TG-1 or TG-2 400 Amp Disconnect Switch

DANGER — HAZARD OF ELECTRICAL SHOCK OR BURN. TURN OFF POWER SUPPLYING THIS EQUIPMENT BEFORE INSTALLING OR SERVICING.

1. Turn switch **OFF.**

2. Mount interlock to inside surface of left hand cross-bar support bracket as shown in fig. 1.

   NOTE: In some switches (depending on date of manufacture) there will be an indentation in the support bracket and it will be necessary to install the spacer shown in fig. 2 between the interlock and the support bracket.

3. Turn switch **"ON"** and observe interlock to be sure snap switch has operated. Slowly pull switch operating handle toward **"OFF".** The interlock snap switch should operate **before** the disconnect switch blades open.

4. If snap switch does not open before disconnect switch in Step 3, it may be necessary to install the adjustment plate shown in fig. 2 between the interlock operating mechanism and snap switch. Remove snap switch, install adjustment plate and re-mount snap switch.

5. Wire snap switch to control circuit as required.

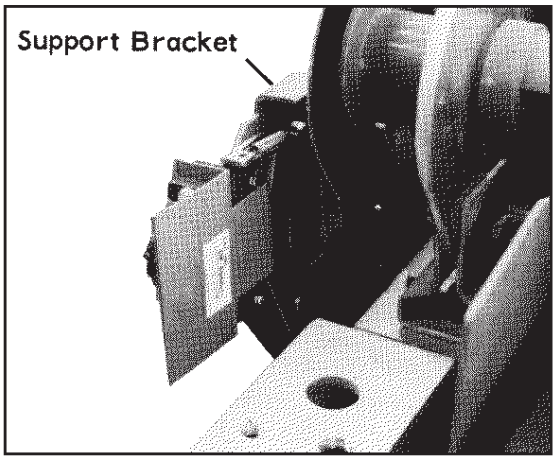

Fig. 1

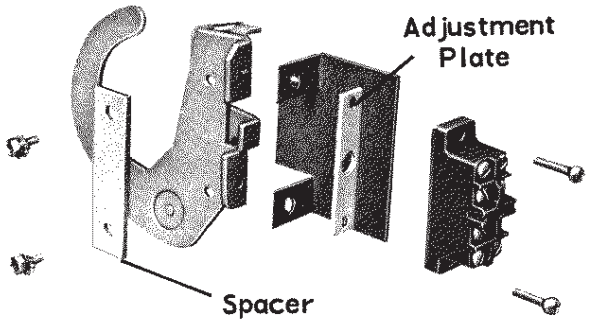

Fig. 2