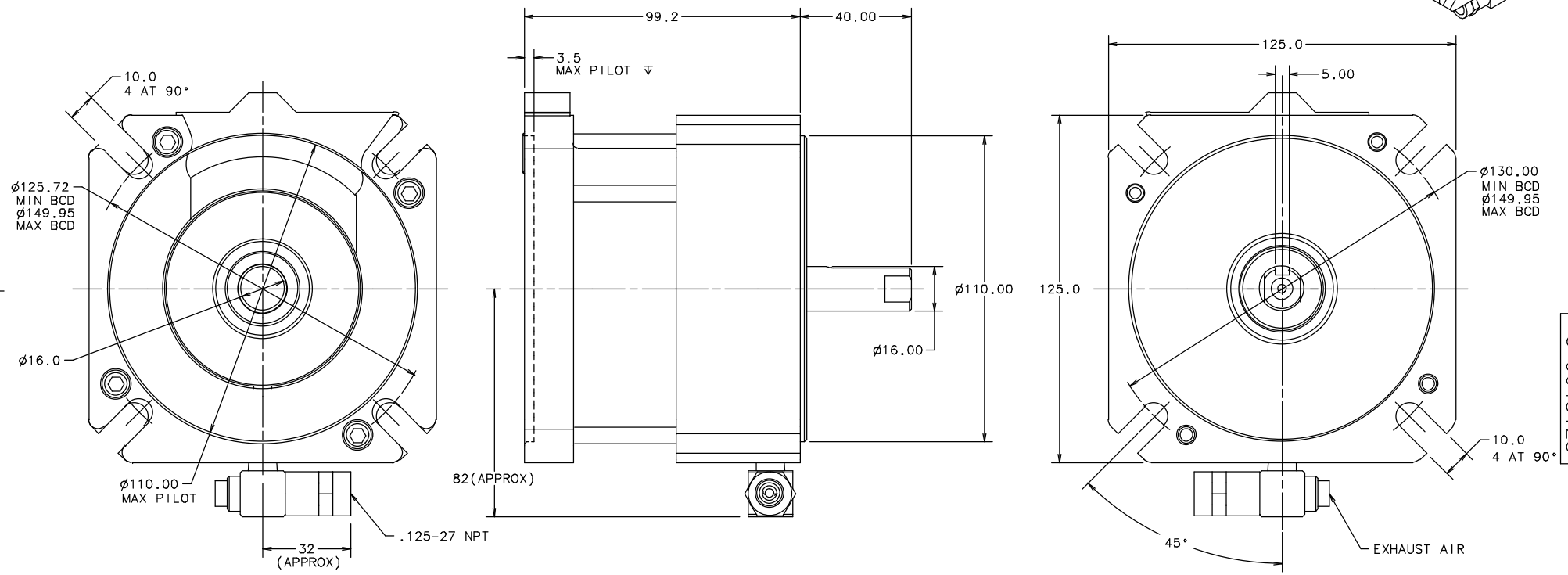

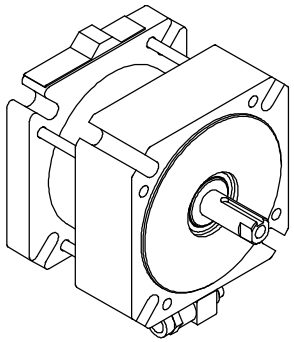

C-964812S

GEOMETRIC TOLERANCE VALUES	
MM	INCH
.013	.0005
.03	.001
.05	.002
.08	.003
.13	.005
.20	.008
.25	.010
.38	.015

THIRD ANGLE PROJECTION

SURFACE ROUGHNESS VALUES	
µm	µin
6.3	250
3.2	125
1.6	63
0.8	32
0.4	16
0.2	8

UNLESS OTHERWISE SPECIFIED

1. SURFACE TEXTURE: √
2. METRIC TOLERANCES: X ±0.8; .X ±0.5; .XX ±0.13
   INCH TOLERANCES: .XX ±.02; .XXX ±.005
3. ANGLES ±.5°
4. PRIMARY DIMENSIONS ARE IN MM
   SECONDARY DIMENSIONS ARE IN INCHES
5. REMOVE ALL BURRS AND SHARP EDGES
6. DO NOT SCALE DWG - WORK TO DIMS
7. PART MUST CONFORM TO ENGINEERING STANDARD WORK INSTRUCTIONS

nexen™ Nexen Group, Inc.

TITLE GENERAL DIMENSIONS

MODEL SBP4-16.0-040-110-10-130-16-NO-STD

MATL		B	18091	07-20-07
MATL #		REV	ECO	ERO	DATE
DWN SHO	DATE 06-13-00	SCALE:NONE	WAS C-964812S-A	
CHKD PAR	DATE 06-13-00	SHEET 1 OF 1		REV
APVD AL	DATE 06-13-00	C-964812S		B