SELECTION/DIMENSIONS

TORQUE-ARM II Shaft Mount Speed Reducers

BELT GUARD DIMENSIONS TA0107L - TA5215H

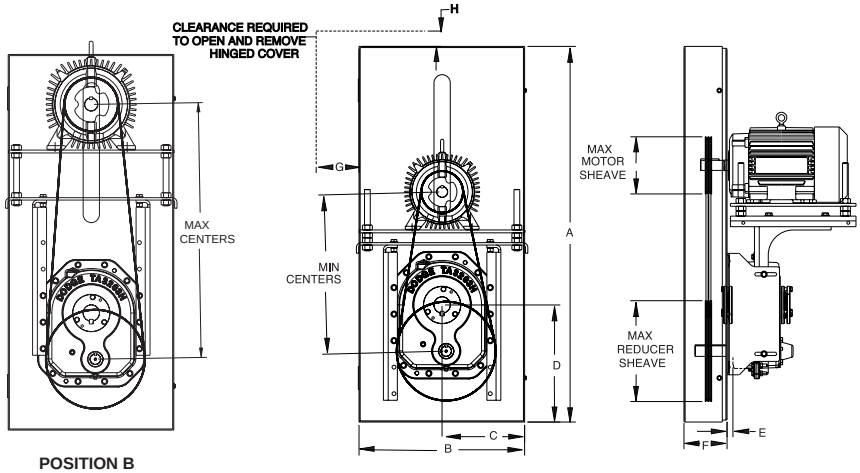

POSITION B

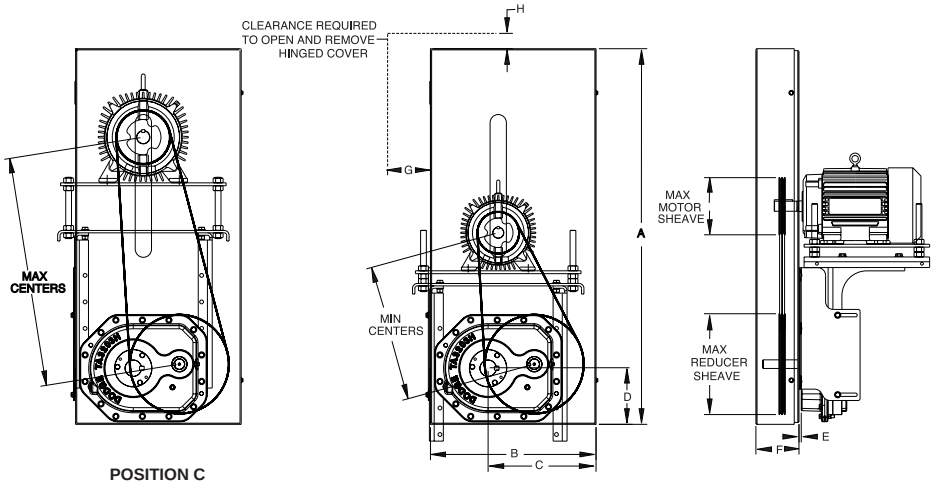

POSITION C

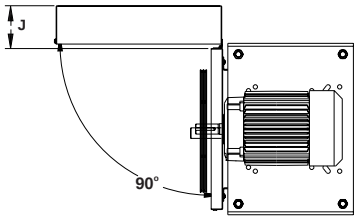

TORQUE-ARM II Shaft Mount Speed Reducers

BELT GUARD DIMENSIONS, TA0107L - TA5215H

Case Size	Mounting Position	Centers		Max Sheave Dia.		A	B	C
		Min	Max	Motor	Reducer			
TA0107L	B	16.7	26.9	11.0	12.4	41.50	16.00	8.00
	C	14.4	25.5	11.4	12.3	41.50	16.00	10.43
TA1107H	B	16.0	28.0	10.8	12.8	41.50	16.00	8.00
	C	16.0	26.3	9.4	9.4	41.50	16.00	11.55
TA2115H	B	17.8	31.1	8.6	12.8	43.50	19.25	9.62
	C	16.8	28.9	9.3	12.3	43.50	19.25	13.07
TA3203H	B	18.9	34.3	9.2	16.8	49.00	21.60	10.80
	C	15.0	31.0	15.8	14.0	49.00	21.60	14.12
TA4207H	B	21.8	38.3	10.3	16.9	53.50	24.60	12.30
	C	22.4	35.5	16.5	15.9	53.50	24.60	16.11
TA5215H	B	25.7	44.1	11.8	17.8	60.50	27.60	13.80
	C	25.6	39.6	18.6	16.9	60.50	27.60	17.85

Case Size	Mounting Position	D	E		F	G	H	J
			Min	Max				
TA0107L	B	11.74	0.04	1.66	4.23	4.22	2.00	4.22
	C	7.33	0.04	1.66	4.23	4.22	2.00	4.22
TA1107H	B	11.74	0.00	1.57	4.23	4.22	2.00	4.22
	C	5.50	0.00	1.62	4.23	4.22	2.00	4.22
TA2115H	B	12.70	0.19	1.60	4.23	4.22	2.00	4.22
	C	7.00	0.19	1.56	4.23	4.22	2.00	4.22
TA3203H	B	15.27	0.04	2.54	5.62	5.59	2.00	5.59
	C	7.32	0.09	2.66	5.62	5.59	2.00	5.59
TA4207H	B	16.56	0.00	2.50	5.62	5.59	2.00	5.59
	C	8.32	0.13	2.70	5.62	5.59	2.00	5.59
TA5215H	B	18.25	0.00	2.44	6.37	6.09	2.00	6.09
	C	9.60	0.08	2.64	6.37	6.09	2.00	6.09

Notes:

1. Minimum centers allow 0.5” for belt assembly
2. Maximum sheave diameters allow 0.5” clearance for belt assembly
3. Range of center distances on belt guard may be less than the full range of center distances available on the motor mount
4. Belt guard cover is hinged on the left side
5. 2.00” head room required to lift belt guard cover off its hinge pins
6. Belt guard cover must be opened at least 90 degrees for removal
7. Belt guard attaches to motor mount brackets
8. “E” maximum dimension allows clearance for cooling fan
9. Stock Position-B Belt Guards cannot be used with TA II Reducers mounted in D position. A special belt guard is required.
10. Stock Position-C Belt Guards cannot be used with TA II Reducers mounted in A position. A special belt guard is required.

Gearing Reference Guide
TORQUE-ARM II
TORQUE-ARM
MAXUM Concentric Reducer
TIGEAR-2

SELECTION/DIMENSIONS

TORQUE-ARM II Shaft Mount Speed Reducers

BELT GUARD DIMENSIONS TA6307H - TA12608H

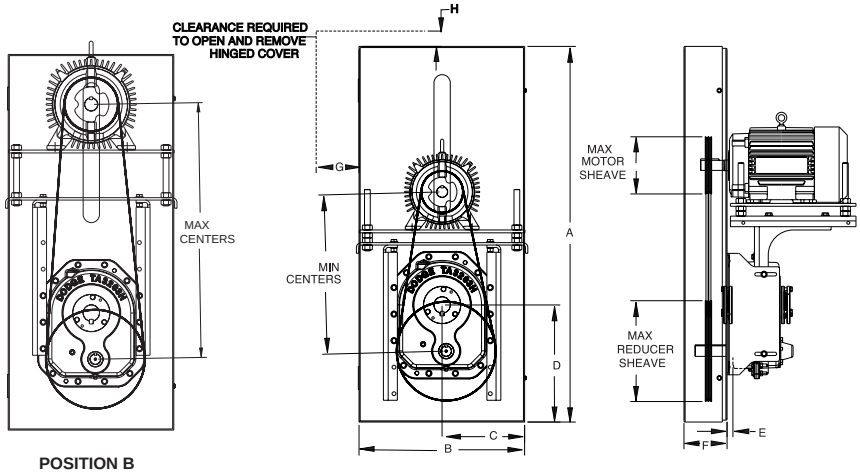

POSITION B

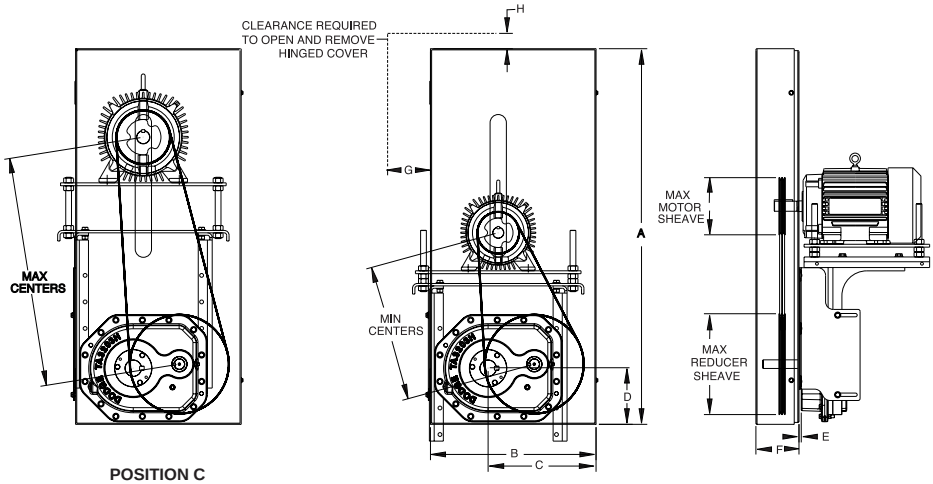

POSITION C

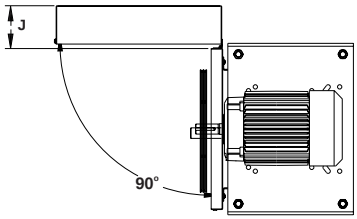

TORQUE-ARM II Shaft Mount Speed Reducers

BELT GUARD DIMENSIONS, TA6307H - TA12608H

Case Size	Mounting Position	Centers		Max Sheave Dias.		A	B	C
		Min	Max	Motor	Reducer			
TA6307H	B	26.6	46.5	12.8	19.9	64.50	29.10	14.15
	C	26.8	40.9	21.0	20.0	64.50	29.10	17.94
TA7315H	B	29.5	50.6	12.0	25.0	71.50	30.60	18.51
	C	28.6	43.6	22.0	25.0	71.50	30.60	22.39
TA8407H	B	29.7	50.8	12.0	25.2	71.50	30.60	13.45
	C	28.7	43.8	22.0	24.6	71.50	30.60	22.39
TA9415H	B	35.0	49.2	15.4	28.0	72.50	31.60	19.57
TA10507H	B	46.2	60.8	23.2	30.8	89.50	32.60	16.30
TA12608H	B	48.4	63.3	18.2	30.8	89.50	32.60	16.30

Case Size	Mounting Position	D	E		F	G	H	J
			Min	Max				
TA6307H	B	19.92	0.00	3.56	6.87	6.59	2.00	6.59
	C	10.72	0.00	3.60	6.87	6.59	2.00	6.59
TA7315H	B	23.38	0.00	4.43	7.37	7.09	2.00	7.09
	C	10.25	0.00	3.17	7.37	7.09	2.00	7.09
TA8407H	B	14.14	0.00	4.12	7.37	7.09	2.00	7.09
	C	10.25	0.00	2.86	7.37	7.09	2.00	7.09
TA9415H	B	26.22	0.00	3.50	8.37	8.09	2.00	8.09
TA10507H	B	36.14	0.00	3.56	8.87	8.59	2.00	8.59
TA12608H	B	37.91	0.00	3.56	8.87	8.59	2.00	8.59

Notes:

1. Minimum centers allow 0.5” for belt assembly
2. Maximum sheave diameters allow 0.5” clearance for belt assembly
3. Range of center distances on belt guard may be less than the full range of center distances available on the motor mount
4. Belt guard cover is hinged on the left side
5. 2.00” head room required to lift belt guard cover off its hinge pins
6. Belt guard cover must be opened at least 90 degrees for removal
7. Belt guard attaches to motor mount brackets
8. “E” maximum dimension allows clearance for cooling fan
9. Stock Position-B Belt Guards cannot be used with TA II Reducers mounted in D position. A special belt guard is required.
10. Stock Position-C Belt Guards cannot be used with TA II Reducers mounted in A position. A special belt guard is required.