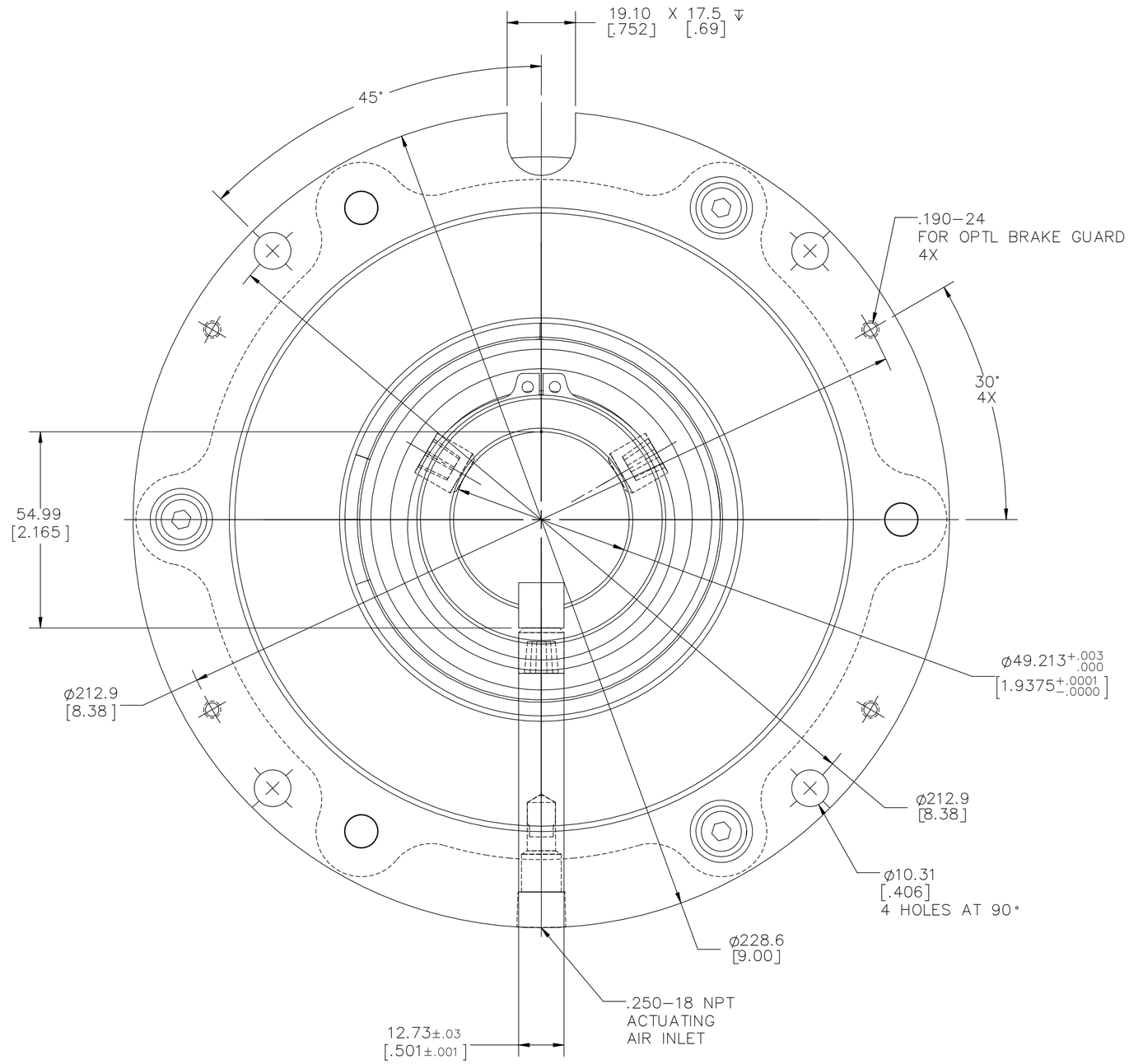

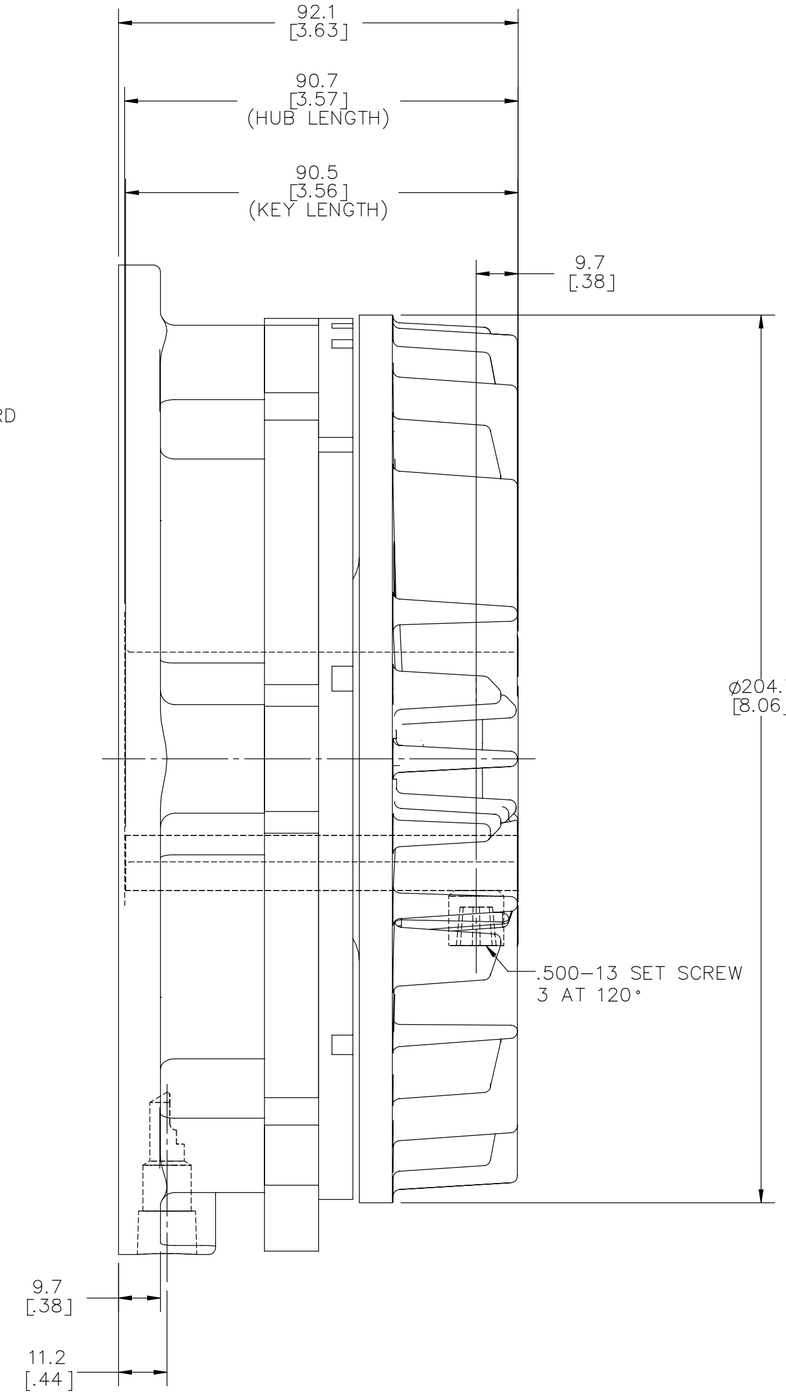

C–828007S

GEOMETRIC TOLERANCE VALUES	
MM	INCH
.013	.0005
.03	.001
.05	.002
.08	.003
.13	.005
.20	.008
.25	.010
.38	.015

THIRD ANGLE PROJECTION

SURFACE ROUGHNESS VALUES	
µm	µin
6.3	250
3.2	125
1.6	63
0.8	32
0.4	16
0.2	8

UNLESS OTHERWISE SPECIFIED

1. METRIC TOLERANCES: X ±0.8; .X ±0.5; .XX ±0.13
   INCH TOLERANCES: .XX ±.02; .XXX ±.005
2. ANGLES ±.5°
3. PRIMARY DIMENSIONS ARE IN MM
   SECONDARY DIMENSIONS ARE IN INCHES
4. DO NOT SCALE DWG – WORK TO DIMS
5. PRODUCT MUST CONFORM TO ENGINEERING STANDARD WORK INSTRUCTIONS

nexen® Nexen Group, Inc.

TITLE GENERAL DIMENSIONS

MODEL S–800A*1.938 BORE,LCO

			42370	20460	8/22/2014
			ERO	ECO	DATE
DWN	TRW	DATE	5/5/2011	SCALE: 1:1 [X]	SHEET 1 OF 1
CHKD	TGH	DATE	5/5/2011	C–828007S	REV D
APVD	IKK	DATE	5/10/2011		