Climax Metal Products Company
8141 Tyler Boulevard
Mentor, Ohio 44060
USA

Toll free: 800-542-6552
Phone: 440-585-0300
Fax: 800-860-5553
Email: sales@climaxmetal.com
Website: www.climaxmetal.com

ITEM # 1C-100-Z, ONE-PIECE CLAMPING COLLAR 1C-SERIES

Zinc One-Piece Clamping Collar. Design fully engages the shaft without marring. Greater axial holding power than set screw collars. Effective on hard & soft shafts.

Drawing | Specifications |

Drawing

Dimensional Drawing

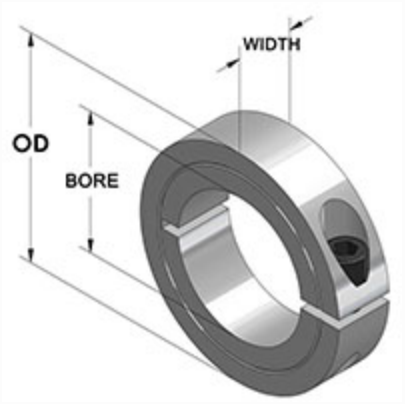

One-Piece Clamping Collar

Specifications

Bore	1 in
OD	1 3/4 in
Width	1/2 in
Style	One-Piece Clamp
Material	Steel, ASTM A108
Finish	Zinc Plated
Clamp Screw	Hex Socket Cap Screw, 3A Thread, Stainless Steel, ASTM F837: 1/4-28 x 5/8
Recessed Screw	No
Approximate Weight	3.30 oz
UPC Code	044861415542
Downloads	Catalog Page

Competitor Part Number

Alternate Part Number	0403739 101807154 1571057 175D01684 9961K26 CL-16-FZ