PRODUCT INFORMATION PACKET

Model No: C90T17FZ16A
Catalog No: 192205.00
2HP-1.5KW..1710RPM.90L.IP55.230/460V.3PH.60HZ.CONT.40C.1.15SF.B3.....IEC METRIC.....
TEFC

Regal and Leeson are trademarks of Regal Beloit Corporation or one of its affiliated companies.
©2018 Regal Beloit Corporation, All Rights Reserved. MC017097E

Nameplate Specifications

Output HP	**2 Hp**	Output KW	**1.5 kW**
Frequency	**60 Hz**	Voltage	**230/460 V**
Current	**5.4/2.7 A**	Speed	**1745 rpm**
Service Factor	**1.15**	Phase	**3**
Efficiency	**86.5 %**	Duty	**Continuous**
Insulation Class	**F**	Design Code	**B**
KVA Code	**J**	Frame	**D90L**
Enclosure	**Totally Enclosed Fan Cooled**	Overload Protector	**No**
Ambient Temperature	**40 °C**	Drive End Bearing Size	**6205**
Opp Drive End Bearing Size	**6205**	UL	**Recognized**
CSA	**Y**	CE	**Y**
IP Code	**55**		

Technical Specifications

Electrical Type	**Squirrel Cage Induction Run**	Starting Method	**Line Or Inverter**
Poles	**4**	Rotation	**Reversible**
Mounting	**B3**	Motor Orientation	**HORIZONTAL**
Drive End Bearing	**BALL**	Opp Drive End Bearing	**BALL**
Frame Material	**Aluminum**	Shaft Type	**IEC**
Overall Length	**13.38 in**	Frame Length	**7.08 in**
Shaft Diameter	**1.000 in**	Shaft Extension	**1.96 in**
Assembly/Box Mounting	**F3**		
Outline Drawing	**16999500**	Connection Diagram	**005465.01**

This is an uncontrolled document once printed or downloaded and is subject to change without notice. Date Created: 10/15/2018

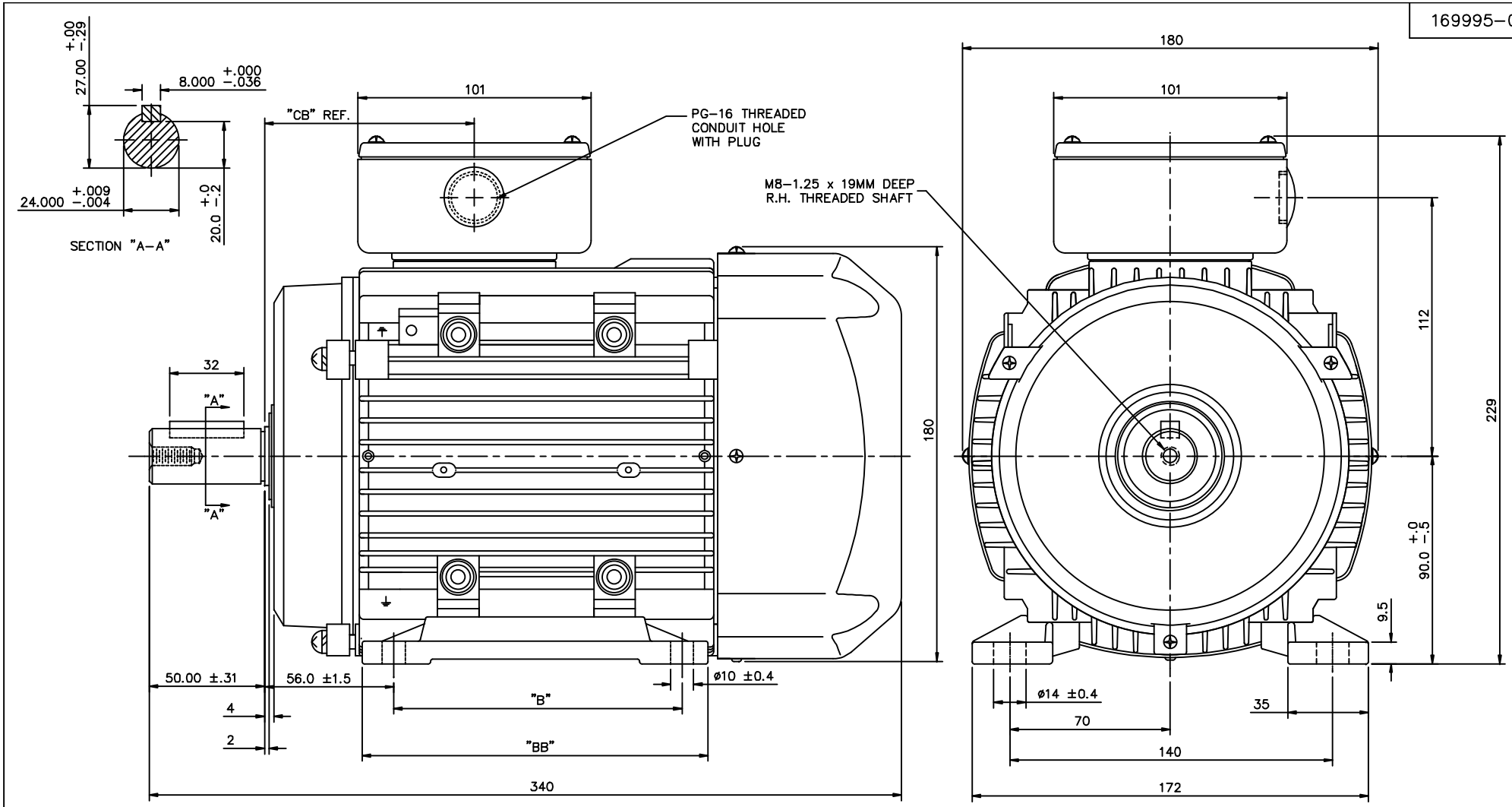

FRAME DESIGN	"B"	"BB"	"CB"
90L	125±0.7	150	91
90S	100±0.7	125	79

NO.	REVISION	BY & DATE	CHK

TOLERANCES UNLESS SPECIFIED

DEC.	METRIC
.X	±2.5
.XX	±.76
.XXX	±.127
.XXXX	±.0127
ANG	±1/2°

REGAL-BELOIT CORPORATION

TITLE: METRIC OUTLINE, IMB3
IEC-90 FRAME

MAT'L.: ALUMINUM

FINISH

CAD FILE: 16999500

RFP

DIST

DRAWN	LST 12/28/11
CHK	
APPD	
SCALE	1=1.6
REF	169862-00
FMF	LEESON STOCK
PREV	

SIZE: B
DRAWING NO.: 169995-00
REV.:

THIS DRAWING IN DESIGN AND DETAIL IS OUR PROPERTY AND MUST NOT BE USED EXCEPT IN CONNECTION WITH OUR WORK ALL RIGHTS OF DESIGN AND INVENTION ARE RESERVED
THIS IS AN ELECTRONICALLY GENERATED DOCUMENT – DO NOT SCALE THIS PRINT

12/28/2011 11:38:14 AM - Converted by Connexus

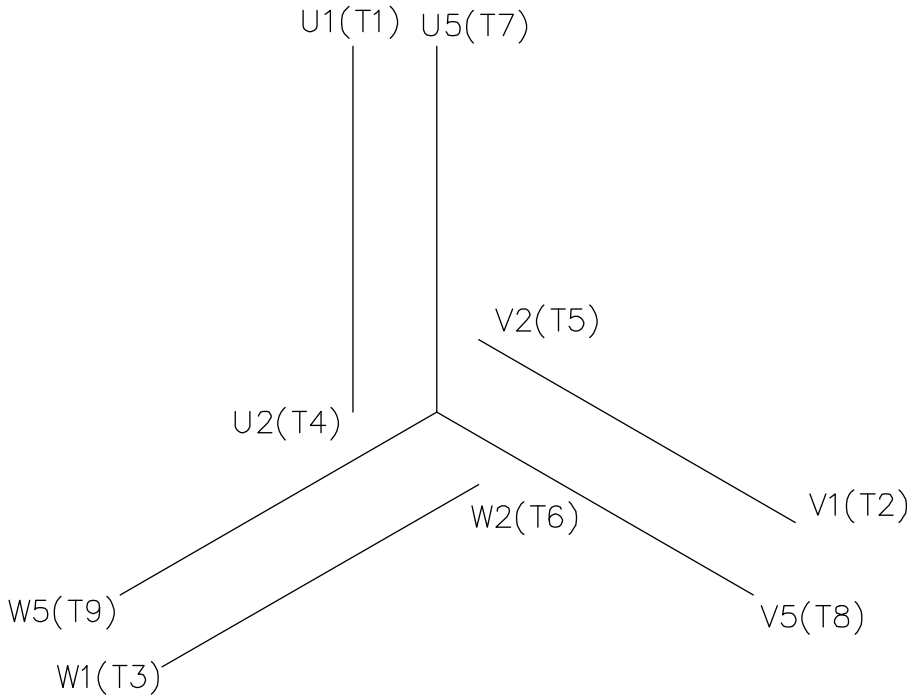

REF. DECAL (IEC) 080644
REF. DECAL (NEMA) 080446

IEC MARKINGS

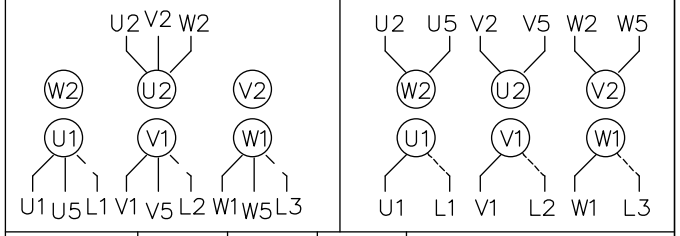

LINE VOLTAGE	L1	L2	L3	JOIN		
TERMINAL	U1	V1	W1	W2	U2	V2
LOW	U1,U5	V1,V5	W1,W5	---	U2,V2,W2	---
HIGH	U1	V1	W1	U2,U5	V2,V5	W2,W5

NEMA MARKINGS

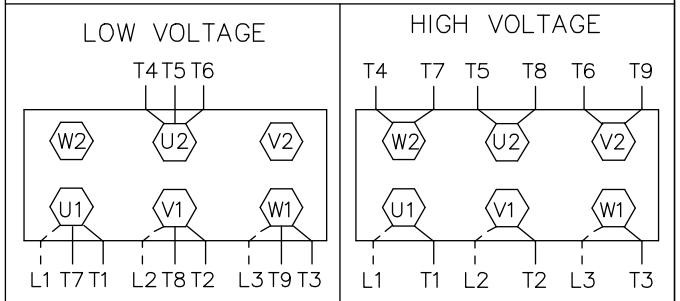

LINE VOLTAGE	L1	L2	L3	JOIN		
TERMINAL	U1	V1	W1	W2	U2	V2
LOW	T1, T7	T2, T8	T3, T9	---	T4,T5,T6	---
HIGH	T1	T2	T3	T4, T7	T5, T8	T6, T9

NO.	REVISION	BY & DATE	CHK
01	NEMA LV CONNECTION WAS INCORRECT	RLW 8/4/03	

TOLERANCES UNLESS SPECIFIED

DEC.	INCHES
.X	±.1
.XX	±.01
.XXX	±.005
.XXXX	±.0005
ANG	±1/2°

LEESON ELECTRIC MOTORS GEARMOTORS AND DRIVES

TITLE EXTERNAL WIRING DIAGRAM
3 PHASE – DUAL VOLTAGE – W/TERM BLOCK

MAT'L. IEC/NEMA MARKINGS

FINISH THERMAL TRANSFER

CAD FILE 00546501

RFP

DIST

DRAWN MGM 12/3/02
CHK
APPD
SCALE 1=1
REF 00537703
FMF
PREV

SIZE A | DRAWING NO. 005465-01 | REV. 01

THIS DRAWING IN DESIGN AND DETAIL IS OUR PROPERTY AND MUST NOT BE USED EXCEPT IN CONNECTION WITH OUR WORK ALL RIGHTS OF DESIGN AND INVENTION ARE RESERVED
THIS IS AN ELECTRONICALLY GENERATED DOCUMENT – DO NOT SCALE THIS PRINT

4/8/2013 2:38:25 PM - Converted by Connexus

Uncontrolled Copy

LEESON ELECTRIC CORPORATION

TYPICAL PERFORMANCE CURVE for AC MOTOR

Curve at 460 **Volts** **HP** 2&2 **PHASE** 3
60 **HZ**
2 **HP** **VOLTS** 230/460&200/400

Model No 192205.00

Catalog No 192205.00 **HZ** 60&50 **RPM** 1745&1435

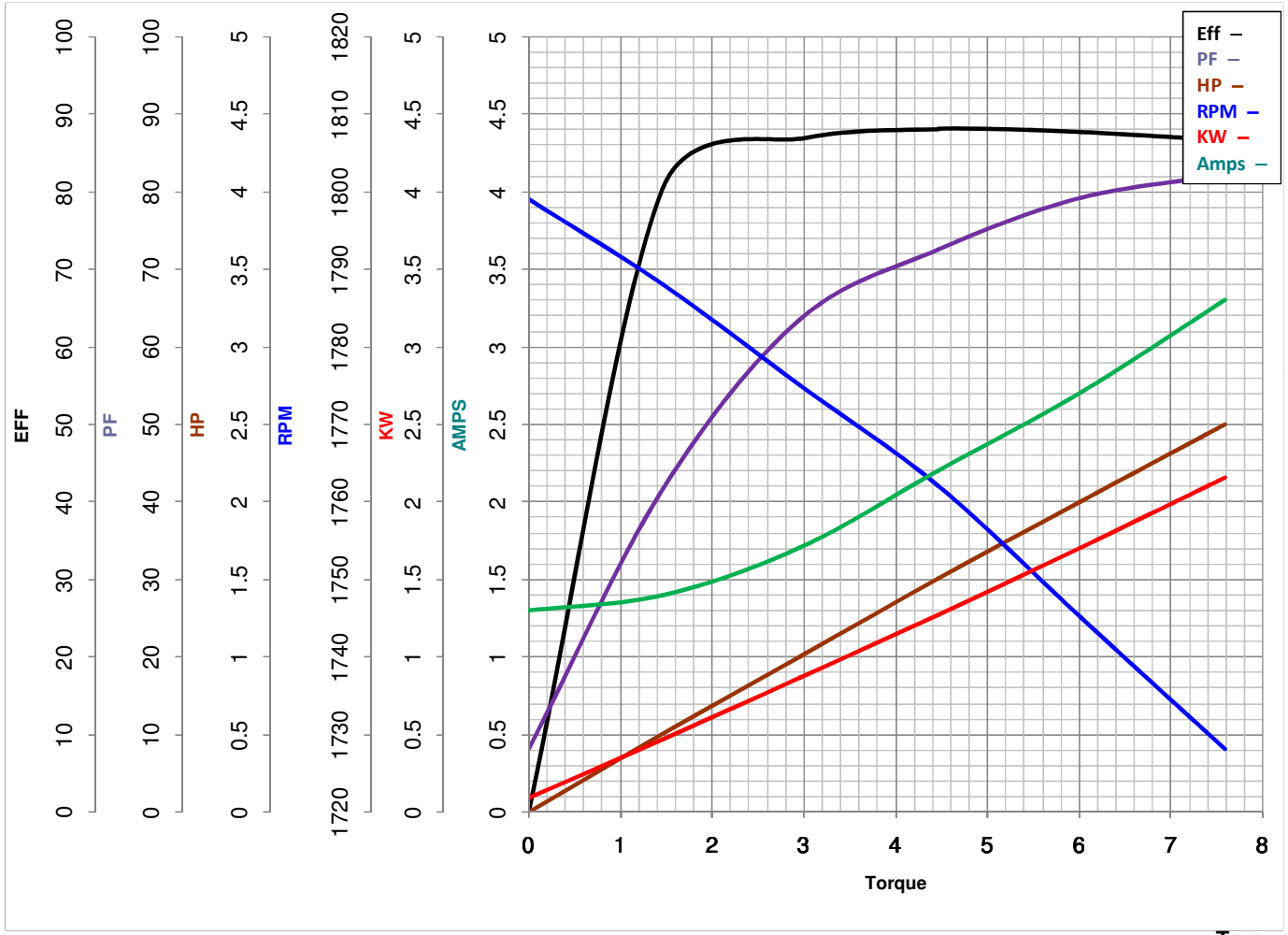

Torque in Lb.Ft

FL TORQUE	6.018	**Lb.Ft**	**FL AMPS**	5.4/2.7	
BD TORQUE	18.1	**Lb.Ft**	**PU TORQUE**	11.3	**Lb.Ft**
LR TORQUE	14.39	**Lb.Ft**	**LR AMPS**	18.7	
WINDING	QT9047-3			**Date**	**5/21/2018**