Fractional Hp Clutches & Brakes

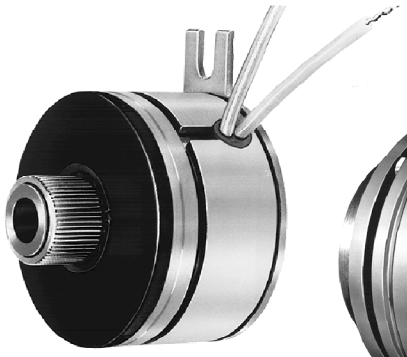

SL SERIES

BSL SERIES

SL & BSL SERIES ELECTRIC CLUTCHES

- BEARING MOUNTED
- COUPLES 2 PARALLEL SHAFTS
- SL HAS 9 SIZES FOR SHAFT DIAMETERS 3/16-3/4″
- BSL HAS 2 SIZES FOR SHAFT DIAMETERS 1/2-1″
- PROTECTIVE ZINC CHROMATE PLATING

SO SERIES

SO SERIES ELECTRIC CLUTCH-COUPLINGS

- COUPLES IN-LINE SHAFTS
- ZINC CHROMATE PLATING FOR CORROSION RESISTANCE
- 9 SIZES FOR SHAFT DIAMETERS 3/16-1″

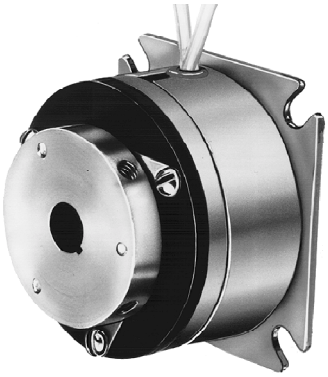

FB SERIES

FB SERIES POWER ON BRAKES

- POWER-ON BRAKE, ENGAGES WHEN VOLTAGE IS APPLIED, RELEASES WHEN VOLTAGE IS TURNED OFF
- 9 SIZES FOR SHAFT DIAMETERS 3/16-1″

FSB SERIES

FSBR SERIES

FSB AND FSBR SERIES POWER OFF BRAKES

FSB

- FLANGE MOUNTED
- ENGAGES WHEN VOLTAGE IS REMOVED
- 7 SIZES FOR SHAFT DIAMETERS 3/16-3/4″
- NON-ASBESTOS, NON-LEAD FRICTION MATERIAL FOR LONG-LIFE AND QUIET OPERATION

FSBR

- DESIGNED FOR APPLICATIONS REQUIRING MINIMAL SPACE
- 5 SIZES FOR SHAFT DIAMETERS 5/16-3/4″
- NON-ASBESTOS, NON-LEAD FRICTION MATERIAL FOR LONG-LIFE AND QUIET OPERATION