Poweratio® 2000 HELICAL BEVEL DRIVES

K

Helical Bevel Product Features ..... K-2 to K-3
- Selection Procedure ..... K-4 to K-5
- Descriptions K-6
- Mounting Positions K-7
- Model Selection Index K-8
- Selection By Input HP ..... K-9 to K-21
- Integral Gearmotor Dimensions ..... K-22 to K-25
- Ratings By Model ..... K-26 to K-29
- Reducer Dimensions ..... K-30 to K-37
- Accessories ..... K-38 to K-39
- Shipping Weights & Motor Capability K-40
- Factory Options ..... See Page L-47

Poweratio® 2000 HELICAL BEVEL DRIVES

HIGH EFFICIENCY HELICAL BEVEL RIGHT ANGLE DRIVES

Advanced design with competitive interchangeability.

BASIC SPECIFICATIONS

- Power Ratings from 1/4 to 130 hp
- Output Torque 70,000 inch/lbs.
- Ratios from 6.1 through 3413:1
- Output speeds .5 rpm to 280 rpm

STANDARD FEATURES

- Universal Base, Flange and Hollow Bore Mounting with Competitive Interchange Capability
- Precision Carburized and Hardened Spiral Bevel and Crowned Helical Gearing
- Double Lip Spring Loaded Seals with Precision Ground Seal Journals
- High Capacity Ball and Tapered Bearings with Splash Lubrication, Factory Filled
- Enhanced High Tensile Strength Steel Shafting with Low Notch Sensitivity
- Optimum Structural Designed Housings made of High Strength Alloy Cast Iron

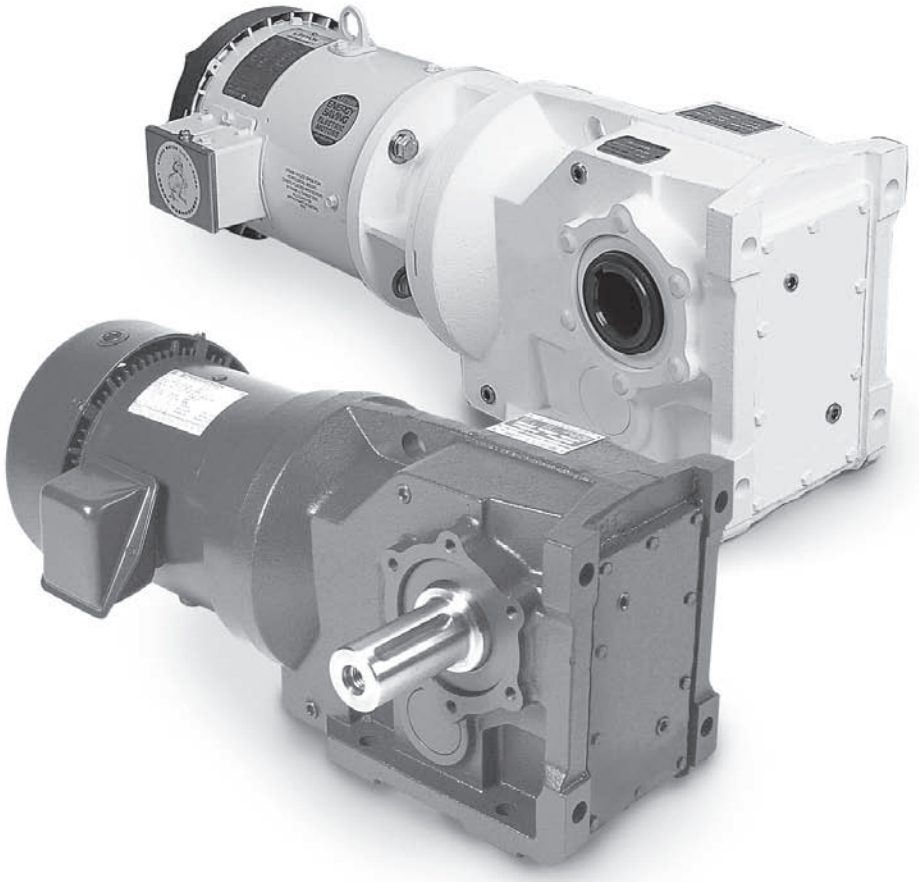

OPTIONAL FEATURES

- Modified Standard and Custom Designs
- Hollow or Solid Output Shafts in Metric Sizes
- Brake or Inverter Duty Motors (50/60 hz)
- Washdown and BISSC Configurations

INTEGRAL GEARMOTORS

- 6 Sizes Available Up To 5 hp.
- Motors Produced By Marathon Electric for High Efficiency, Reliability and Durability

CALL: (605) 225-0360 • FAX: (605) 225-0567

HELICAL BEVEL DRIVES

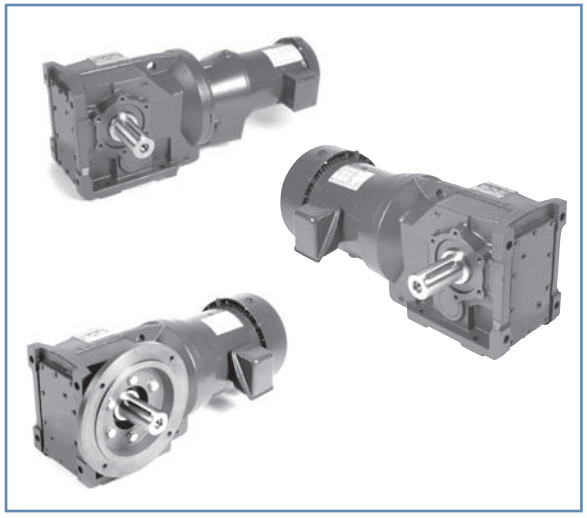

INTEGRAL GEARMOTORS

Triple Reduction
Quin Reduction
- *Foot Mount*
- *Flange Mount*
- *Shaft Mount*

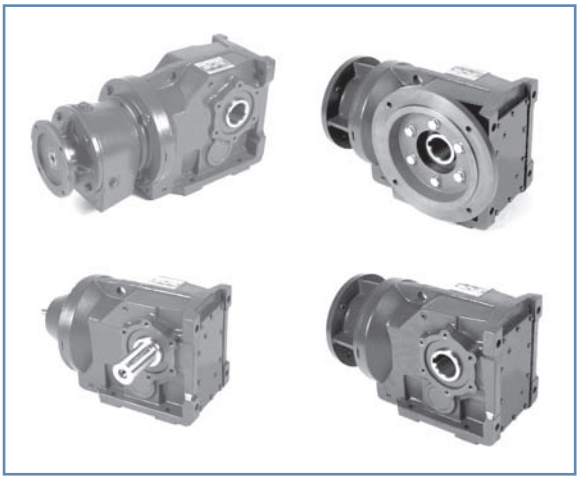

REDUCERS

Triple Reduction
Quin Reduction
- *NEMA C-Frame Quill Input*
- *Shaft Input*
  - *Foot Mount*
  - *Flange Mount*
  - *Shaft Mount*

Cleanline™ premium washdown duty and metric versions available, See Section O or Consult Factory for details and specifications.

SELECTION PROCEDURE

Hub City provides two methods of selection for Reducers and Gearmotors.

On pages K-9 to K-21, the Selection Tables by Input H.P. can be used whenever the Input H.P. requirement is known. This method is commonly used for Gearmotors, but can also be used for Reducers.

On pages K-26 to K-29, the Input H.P. and Output Torque Ratings are provided for each model. These rating tables can be used for Reducers and Gearmotors.

SELECTION BY INPUT H.P.

For selection by Input H.P, determine the Input H.P., Output Speed and Load Classification (Service Factor) requirements. (See pages K-5, A-2 and A-5 to A-8 for AGMA Load Classification and Service Factors.) Then refer to Selection Tables by Input H.P., locate the required H.P. and Output Speed, and read across to the required foot or flange mount unit.

These tables also list the Service Factor for the unit indicated. In many cases, more than one unit is listed, to provide different service factors. Select the unit with a service factor that meets or exceeds the requirement of the application.

Check the Output Overhung Load or Output Thrust rating and Output Torque to verify they meet the requirements. (The Output Torque listed is the actual torque obtained with the motor H.P. listed, not the rated torque.) Then refer to the dimension tables to check the unit dimensions.

If a Reducer with C-Frame input is desired, the available frame sizes for each Reducer model are shown in the dimension tables, and also on page K-40. Specify the description as shown on page K-6.

If a Motorized Reducer is desired, make the motor selection with compatible C-Frame size, from the motors listed in Section H. Specify either the catalog number or the complete description of the motor, in addition to the Reducer description.

The selection tables indicate which units are available as Integral Gearmotors. if an Integral Gearmotor is desired, refer to the dimension tables on pages K-22 to K-25 for dimensions with all available motor sizes. Specify the motor H.P. in addition to the Reducer description.

Reducers may be ordered with other C-Frame sizes. The available frame sizes for each reducer model are shown in the dimension tables, and also on page K-40.

SELECTION FROM UNIT RATING TABLES BY INPUT H.P. OR OUTPUT TORQUE

Determine the actual Input H.P. or Output Torque required, Output Speed, and required Service Factor. Multiply the actual H.P. or torque by the required service factor to obtain the required rating of the Reducer. Refer to the Unit Rating Tables by Model and Output Speed, until you locate the model that meets or exceeds the required H.P. or Torque rating.

The actual service factor can be determined by dividing the unit rating by the actual H.P. or Torque.

Check the Input and Output overhung load ratings, and thrust rating to verify they meet the requirement. Then refer to the dimension tables to check the unit dimensions.

Available motor C-Frame sizes for each reducer model are shown in the dimension tables, and also on page K-40.

EFFICIENCY

Helical Gearing and Ball or Tapered Roller Bearings provide a drive with very high efficiency. The approximate efficiency is 97.5% per gear stage.

OVERHUNG LOADS AND THRUST LOADS

Overhung Load and Thrust ratings are listed in the Selection and Rating Tables. Note that OHL and Thrust Ratings cannot be applied simultaneously. Consult Hub City for applications with combined OHL and thrust load.

BRAKEMOTORS

Braking torque must not exceed the rated capacity of the unit.

SERVICE FACTORS

Load Classification Numbers and Service Factors are used in the selection of Gearmotors and Reducers. The relationship between load class numbers and service factors is shown in Table 2.

The Load Class Numbers are designated for Gearmotors which have a uniform power source (i.e. Electric Motor). They consider the type of load and also the duration of service.

The Service Factors are designated for Reducers and consider other power sources (such as Internal Combustion Engines), as well as the type of load and duration of service.

Table 1 and Table 2 list Service Factors and Load Classes for general use.

AGMA Load Classification and Service Factor tables on pages A-5 to A-8 provide approximate service factors for various types of machinery. The service factors are based on uniform power source (i.e. electric motor). Use the service factor conversion table on page A-2 to obtain service factors for internal combustion engines.

All the Class Number and Service Factor charts are to be used as general guidelines for assistance in determining the required service factor. Rely on past experience as well. Consult the factory for severe applications, when there are safety considerations, or a need for extra high reliability.

TABLE 1 — SERVICE FACTORS

		DRIVEN MACHINE LOAD CLASSIFICATION		
PRIME MOVER	DURATION OF SERVICE PER DAY (1)	UNIFORM	MEDIUM SHOCK	HEAVY SHOCK
Electric Motor	Occasional 1/2 hr.	*	*	1.25
	Intermittent 3 hrs.	*	1.00	1.50
	3 - 10 hours	1.00	1.25	1.75
	Over 10 hours	1.25	1.50	2.00
Electric Motor With Frequent Starts and Stops (2)	Occasional 1/2 hr.	*	1.00	1.50
	Intermittent 3 hrs.	1.00	1.25	1.75
	3 - 10 hours	1.25	1.50	2.00
	Over 10 hours	1.50	1.75	2.25
Multi-Cylinder Internal Combustion Engine	Occasional 1/2 hr.	*	1.00	1.50
	Intermittent 3 hrs.	1.00	1.25	1.75
	3 - 10 hours	1.25	1.50	2.00
	Over 10 hours	1.50	1.75	2.25
Single Cylinder Internal Combustion Engine	Occasional 1/2 hr.	1.00	1.25	1.75
	Intermittent 3 hrs.	1.25	1.50	2.00
	3 - 10 hours	1.50	1.75	2.25
	Over 10 hours	1.75	2.00	2.50
Reversing Service Application		Consult Factory		

* UNSPECIFIED SERVICE FACTORS SHOULD BE 1.0 OR AS AGREED UPON BY USER AND MANUFACTURER.

Explanatory Notes

1. Time specified for intermittent and occasional service refers to total operating time per day.
2. Term "frequent starts and stops" refers to more than 10 starts per hour.

TABLE 2 — LOAD CLASSIFICATION NUMBERS

LOAD CLASS (S.F.)	UP TO 3 HRS. TOTAL OPERATION PER DAY	3 TO 10 HRS. TOTAL OPERATION PER DAY	OVER 10 HRS. TOTAL OPERATION PER DAY
I (1.0)	Moderate Shock Load	Uniform Load	
II (1.4)	Heavy Shock Load	Moderate Shock Load	Uniform Load
III (2.0)		Heavy Shock Load	Moderate Shock Load

DESCRIPTIONS

DESCRIPTIONS FOR ORDERING REDUCERS AND GEARMOTORS

The Mounting position must be specified on all orders, and included in the reducer description. To order Motorized Reducers, simply specify the reducer, indicate the motor description or catalog number and specify "Motorized Assembly". To order Integral Gearmotors, simply specify the reducer, motor horsepower and "Integral Gearmotor". Integral Gearmotors in this catalog are supplied with 3 phase 230/460v totally enclosed, fan cooled (TEFC) 1750 rpm general purpose motors.

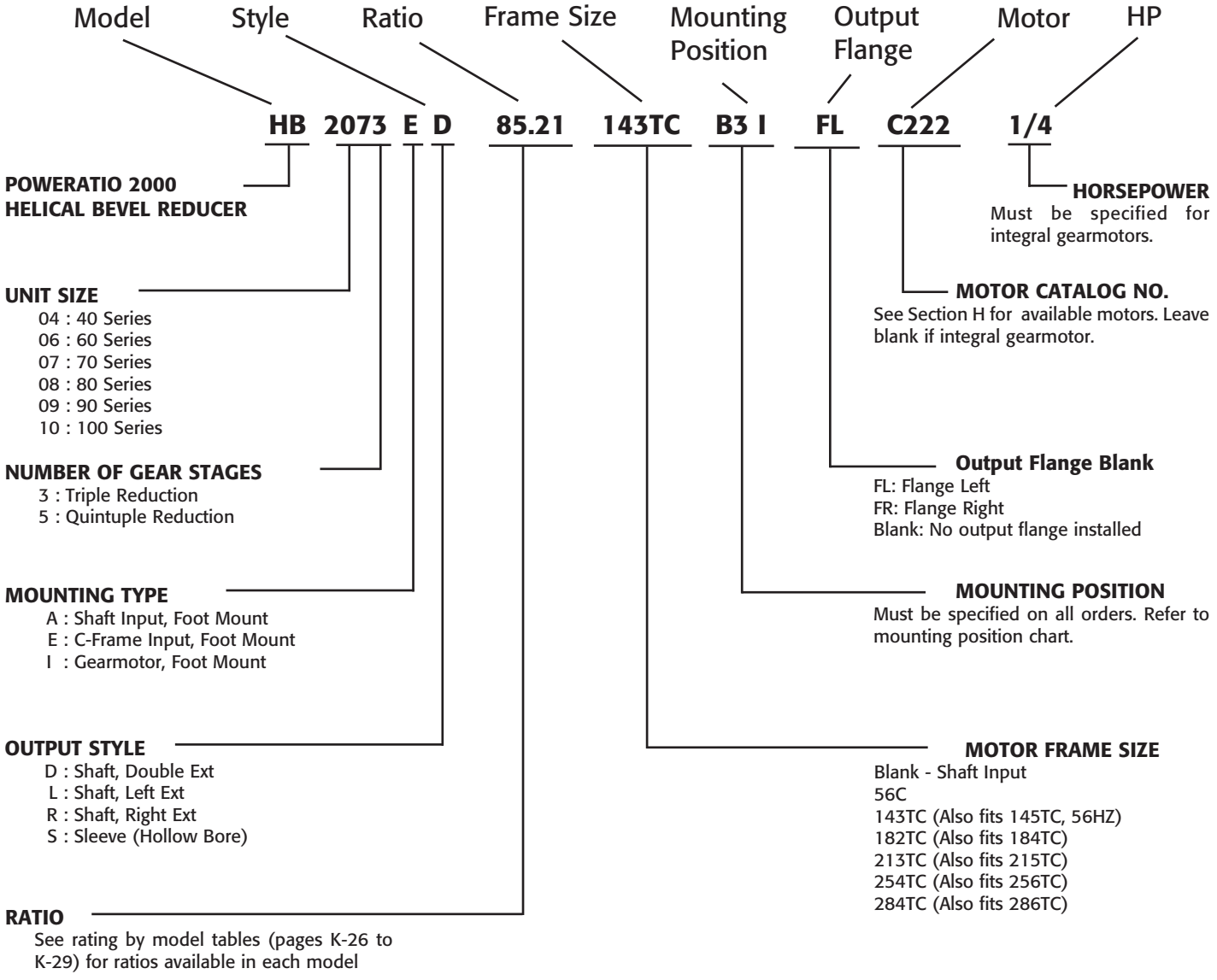

MOUNTING POSITIONS

Mounting position must be specified on all orders, and included in the reducer description, so the correct amount of oil is installed at the factory. (Refer to Section R for lubrication information.)

MOUNTING POSITIONS

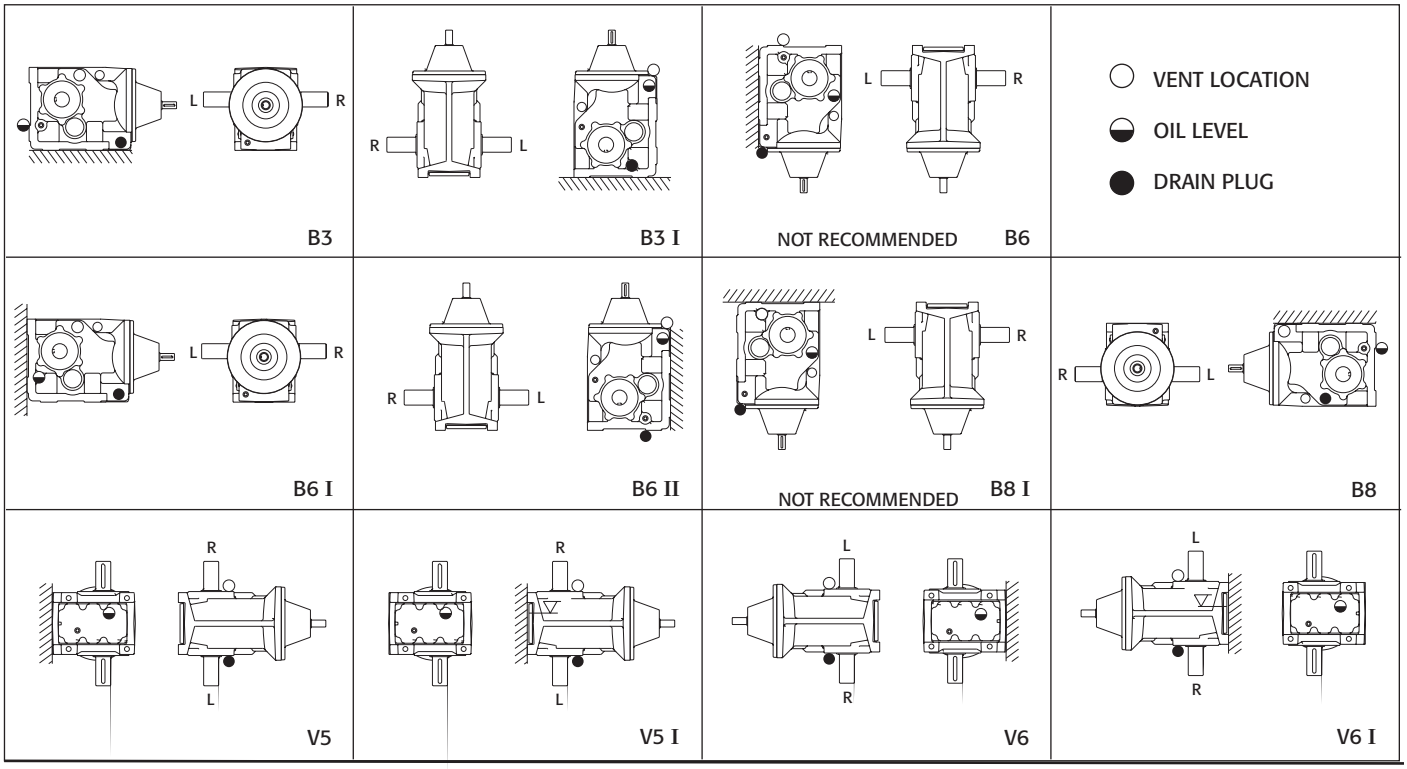

MOTOR DESCRIPTIONS

Available motors and motor data are listed in Section H. Either specify the catalog number or the complete description: HP, RPM, VOLTS, SINGLE OR THREE PHASE, C-FRAME SIZE, ENCLOSURE GENERAL PURPOSE OR OPTIONAL TYPES: WASHDOWN DUTY, INVERTER DUTY, BRAKEMOTOR.

MOTORIZED REDUCERS & GEARMOTORS

The Reducer and Motor are assembled at the factory, and filled with the proper quantity of lubricant based on your specified mounting position. Integral Gearmotors in this catalog are supplied with 3 phase 230/460v totally enclosed, fan cooled (TEFC) 1750 rpm general purpose motors. Special integral gearmotors are available. Consult the factory for details.

Standard Integral Gearmotors and Motorized Reducers are assembled at the factory with the conduit box and the conduit opening at the position illustrated in the dimensional section of this catalog. The user may rotate the body of the motor to reposition the conduit box (in 90° increments from original position). The conduit opening may also be repositioned at 90° increments from the original position. Both operations may be performed without disassembling the drive.

BACKSTOPS

Backstops are available as factory options. Consult the factory for details. Output rotation must be specified as CCW or CW. Refer to drawing below:

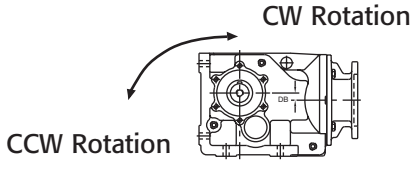

MODEL INDEX

INTEGRAL GEARMOTORS

TRIPLE REDUCTION DIMENSIONS		QUIN REDUCTION DIMENSIONS		RATINGS
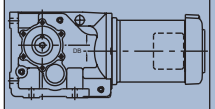	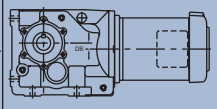	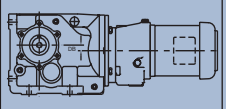	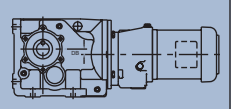	Refer To Selection Pages K-9 to K-21
Page K-22 Shaft Output	Page K-23 Shaft Mount	Page K-24 Shaft Output	Page K-25 Shaft Mount	

C-FRAME QUILL INPUT REDUCERS

	TRIPLE REDUCTION DIMENSIONS		QUIN REDUCTION DIMENSIONS		RATINGS	
	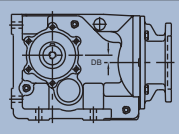	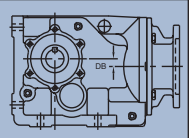	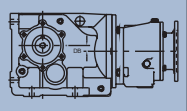	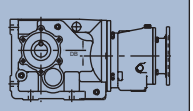		
SERIES	SHAFT OUTPUT	SHAFT MOUNT	SHAFT OUTPUT	SHAFT MOUNT	TRIPLE REDUCTION	QUIN REDUCTION
40	HB2043E* **Page K-30**	HB2043ES **Page K-31**	NA	NA	**Page K-26**	**NA**
60	HB2063E* **Page K-30**	HB2063ES **Page K-31**	HB2065E* **Page K-34**	HB2065ES **Page K-35**	**Page K-26**	**Page K-26**
70	HB2073E* **Page K-30**	HB2073ES **Page K-31**	HB2075E* **Page K-34**	HB2075ES **Page K-35**	**Page K-27**	**Page K-27**
80	HB2083E* **Page K-30**	HB2083ES **Page K-31**	HB2085E* **Page K-34**	HB2085ES **Page K-35**	**Page K-27**	**Page K-28**
90	HB2093E* **Page K-30**	HB2093ES **Page K-31**	HB2095E* **Page K-34**	HB2095ES **Page K-35**	**Page K-28**	**Page K-28**
100	HB2103E* **Page K-30**	HB2103ES **Page K-31**	HB2105E* **Page K-34**	HB2105ES **Page K-35**	**Page K-29**	**Page K-29**

MOTORIZED MODELS ARE SAME AS C-FRAME QUILL MODELS. SIMPLY ORDER THE DESIRED C-FRAME REDUCER, SPECIFY THE MOTOR, AND SPECIFY "MOTORIZED ASSEMBLY".

SHAFT INPUT REDUCERS

	TRIPLE REDUCTION DIMENSIONS		QUIN REDUCTION DIMENSIONS		RATINGS	
	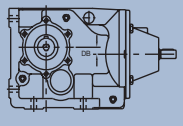	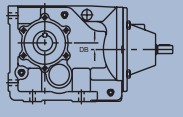	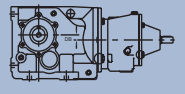	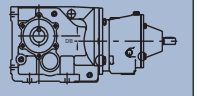		
SERIES	SHAFT OUTPUT	SHAFT MOUNT	SHAFT OUTPUT	SHAFT MOUNT	TRIPLE REDUCTION	QUIN REDUCTION
40	HB2043A* **Page K-32**	HB2043AS **Page K-33**	NA	NA	**Page K-26**	**NA**
60	HB2063A* **Page K-32**	HB2063AS **Page K-33**	HB2065A* **Page K-36**	HB2065AS **Page K-37**	**Page K-26**	**Page K-26**
70	HB2073A* **Page K-32**	HB2073AS **Page K-33**	HB2075A* **Page K-36**	HB2075AS **Page K-37**	**Page K-27**	**Page K-27**
80	HB2083A* **Page K-32**	HB2083AS **Page K-33**	HB2085A* **Page K-36**	HB2085AS **Page K-37**	**Page K-27**	**Page K-28**
90	HB2093A* **Page K-32**	HB2093AS **Page K-33**	HB2095A **Page K-36**	HB2095AS **Page K-37**	**Page K-28**	**Page K-28**
100	HB2103A* **Page K-32**	HB2103AS **Page K-33**	HB2105A* **Page K-36**	HB2105AS **Page K-37**	**Page K-29**	**Page K-29**

* SHAFT OUTPUT STYLES D (DOUBLE), L (LEFT), R (RIGHT)

QUICK START GUIDE TO SELECTION TABLES

HP	OUTPUT SPEED	OUTPUT TORQUE	RATIO	SERVICE FACTOR	OUTPUT OHL	OUTPUT THRUST	GEAR STAGES	MODEL*	INTEGRAL GEARMOTOR
	189	78	9.24	30.05	700	1730	3	HB2043	Available
	145	102	12.07	30.35	800	1950	3	HB2043	Available
			51	27.55	770	1950	3	HB2043	Available
			08	23.17	830	1950	3	HB2043	Available
			94	19.06	930	1950	3	HB2043	Available
			.1	16.66	1050	1950	3	HB2043	Available
			37	13.77	1150	1950	3	HB2043	Available
			38	10.9	1250	1950	3	HB2043	Available
	35	417	49.31	8.48	1250	1950	3	HB2043	Available
	31	477	56.41	7.41	1250	1950	3	HB2043	Available
	24	624	73.76	5.67	1250	1950	3	HB2043	Available
	19	778	91.94	4.55	1250	1950	3	HB2043	Available
	16	938	110.88	3.77				2043	Available
								2063	Available
								2043	Available
	13	1172	138.46	6.2	2050	2850	3	HB2063	Available
	11	1317	155.64	5.51	2050	2850	5	HB2065	Available
1/4	9.1	1629	192.47	8.41	3300	3370	5	HB2075	Available
	8.9	1656	195.7	4.38	2050	2850	5	HB2065	Available
	7.5	1979	233.82	3.67	2050	2850	5	HB2065	Available
	7.2	2061						HB2075	Available
	6.1	2409						HB2065	Available
	5.9	2490						HB2075	Available
	5	2984						HB2075	Available
	4.9	3011						HB2065	Available
								HB2065	Available
								HB2075	Available
								HB2065	
			534.85	3.03	3300	3370	5	HB2075	
	2.7	5457	644.79	2.51	3300	33			
	2.6	5607	662.48	1.29	2050	28			
	2.2	6815	805.21	1.07	2050	28			
	2.1	6928	818.53	1.98	3300	33			
	1.8	8352	986.79	1.64	3300	33			
	1.5	9902	1170	2.41	4800	3540	5	HB2085	
	1.5	10173	1202	1.35	3300	3370	5	HB2075	
	1.2								
	1.2								
	1								

1. Determine Input Horsepower, Output Speed and Load Classification (see Section A).

2. Find appropriate Selection by Input HP page (Beginning on Page K-10)

3. Locate Desired Output speed

4. Locate Required Service Factor (For Help refer to page K-5)

5. Check the Output OHL, output thrust, and Output torque ratings to verify they meet your requirements (Output torque listed is the actual torque obtained by the motor HP listed, not the rated torque).

6. Read across to select model number. Refer to Page K-6 for Mounting type and Ordering information.

IN THIS CATALOG:

HP = Horsepower
Output torque is displayed in inch pounds (in. lbs.)
OHL = Over hung load (measured at centerline of output shaft)
Service Factor is based on maximum rated torque of gear drive

* FOR INTEGRAL GEARMOTORS SPECIFY MOUNTING TYPE I AND MOTOR HORSEPOWER (SEE PAGE K-6).
* FOR MOTORIZED REDUCERS SPECIFY MOUNTING TYPE E AND MOTOR PART NUMBER (SEE SECTION H)
ALL TORQUE VALUES LISTED IN INCH-POUNDS, ALL OVERHUNG LOAD AND THRUST LOAD VALUES LISTED IN POUNDS.
THE POINT OF APPLICATION OF OHL IS CONSIDERED TO BE APPLIED AT THE MIDPOINT OF SHAFT EXTENSION.
OHL AND THRUST RATINGS CANNOT BE APPLIED SIMULTANEOUSLY. CONSULT THE FACTORY FOR APPLICATIONS WITH COMBINED OHL AND THRUST LOAD.
AT SPEEDS ABOVE 1750 RPM, UNITS MAY BECOME THERMALLY LIMITED. FOR EXTENDED OPERATION, LIMIT HP TO 1750 RPM RATING.

SELECTION BY INPUT H.P. @ 1750 RPM

HP	OUTPUT SPEED	OUTPUT TORQUE	RATIO	SERVICE FACTOR	OUTPUT OHL	OUTPUT THRUST	GEAR STAGES	MODEL*	INTEGRAL GEARMOTOR
1/4	189	78	9.24	30.05	700	1730	3	HB2043	Available
	145	102	12.07	30.35	800	1950	3	HB2043	Available
	130	114	13.51	27.55	770	1950	3	HB2043	Available
	102	145	17.08	23.17	830	1950	3	HB2043	Available
	80	186	21.94	19.06	930	1950	3	HB2043	Available
	70	212	25.1	16.66	1050	1950	3	HB2043	Available
	58	257	30.37	13.77	1150	1950	3	HB2043	Available
	46	325	38.38	10.9	1250	1950	3	HB2043	Available
	35	417	49.31	8.48	1250	1950	3	HB2043	Available
	31	477	56.41	7.41	1250	1950	3	HB2043	Available
	24	624	73.76	5.67	1250	1950	3	HB2043	Available
	19	778	91.94	4.55	1250	1950	3	HB2043	Available
	16	938	110.88	3.77	1250	1950	3	HB2043	Available
	15	979	115.64	7.42	2050	2850	3	HB2063	Available
	14	1079	127.45	3.28	1250	1950	3	HB2043	Available
	13	1172	138.46	6.2	2050	2850	3	HB2063	Available
	12	1271	150.16	5.71	2050	2850	5	HB2065	Available
	11.2	1320	155.99	10.38	3300	3370	5	HB2075	Available
	9.2	1608	190	4.51	2050	2850	5	HB2065	Available
	9.1	1620	191.38	8.46	3300	3370	5	HB2075	Available
	7.6	1956	231.14	7.00	3300	3370	5	HB2075	Available
	7.5	1977	233.62	3.67	2050	2850	5	HB2065	Available
	6.2	2406	284.24	3.02	2050	2850	5	HB2065	Available
	6.0	2457	290.33	5.58	3300	3370	5	HB2075	Available
	5.0	2967	350.55	4.62	3300	3370	5	HB2075	Available
	4.9	2999	354.30	2.42	2050	2850	5	HB2065	Available
	4.9	3025	357.41	7.90	4800	3540	5	HB2085	Available
	4.1	3616	427.28	2.01	2050	2850	5	HB2065	Available
	4.1	3639	430.02	3.76	3300	3370	5	HB2075	Available
	3.9	3807	449.80	6.28	4800	3540	5	HB2085	Available
	3.3	4501	531.79	5.31	4800	3540	5	HB2085	Available
	3.3	4474	528.68	1.62	2050	2850	5	HB2065	Available
	3.3	4501	531.87	3.04	3300	3370	5	HB2075	Available
	2.7	5444	643.23	1.33	2050	2850	5	HB2065	Available
	2.7	5522	652.45	2.48	3300	3370	5	HB2075	Available
	2.7	5426	641.10	4.40	4800	3540	5	HB2085	Available
	2.2	6786	801.79	1.07	2050	2850	5	HB2065	Available
	2.2	6721	794.13	3.56	4800	3540	5	HB2085	Available
	2.2	6887	813.78	1.99	3300	3370	5	HB2075	Available
	1.8	8303	981.05	1.65	3300	3370	5	HB2075	Available
	1.8	8355	987.16	2.86	4800	3540	5	HB2085	Available
	1.5	10072	1190	2.37	4800	3540	5	HB2085	Available
	1.4	10285	1215	1.33	3300	3370	5	HB2075	Available
	1.4	10170	1255	3.74	8000	5350	5	HB2095	
	1.2	12476	1474	1.92	4800	3540	5	HB2085	Available
	1.2	12598	1488	1.09	3300	3370	5	HB2075	Available
	1.2	12260	1513	3.10	8000	5350	5	HB2095	
	1.0	14375	1774	2.64	8000	5350	5	HB2095	
	0.9	15810	1868	1.51	4800	3540	5	HB2085	Available
	0.82	17325	2138	2.19	8000	5350	5	HB2095	
	0.78	19060	2252	1.25	4800	3540	5	HB2085	Available
	0.67	21247	2622	1.79	8000	5350	5	HB2095	
	0.65	21854	2697	3.24	13000	6500	5	HB2105	
	0.63	23619	2791	1.01	4800	3540	5	HB2085	Available
	0.53	26903	3320	1.41	8000	5350	5	HB2095	
	0.52	27073	3341	2.62	13000	6500	5	HB2105	
1/3	268	74	6.53	30.02	650	1730	3	HB2043	Available
	239	82	7.31	27.06	675	1730	3	HB2043	Available
	189	104	9.24	22.56	700	1730	3	HB2043	Available
	145	136	12.07	22.78	800	1950	3	HB2043	Available
	130	152	13.51	20.68	770	1950	3	HB2043	Available
	102	193	17.08	17.4	830	1950	3	HB2043	Available
	80	247	21.94	14.31	930	1950	3	HB2043	Available
	70	283	25.10	12.51	1050	1950	3	HB2043	Available
	58	342	30.37	10.34	1150	1950	3	HB2043	Available
	46	433	38.38	8.18	1250	1950	3	HB2043	Available
	35	556	49.31	6.37	1250	1950	3	HB2043	Available
	31	636	56.41	5.57	1250	1950	3	HB2043	Available

* FOR INTEGRAL GEARMOTORS SPECIFY MOUNTING TYPE I AND MOTOR HORSEPOWER (SEE PAGE K-6).
* FOR MOTORIZED REDUCERS SPECIFY MOUNTING TYPE E AND MOTOR PART NUMBER (SEE SECTION H)
ALL TORQUE VALUES LISTED IN INCH-POUNDS, ALL OVERHUNG LOAD AND THRUST LOAD VALUES LISTED IN POUNDS.
THE POINT OF APPLICATION OF OHL IS CONSIDERED TO BE APPLIED AT THE MIDPOINT OF SHAFT EXTENSION.
OHL AND THRUST RATINGS CANNOT BE APPLIED SIMULTANEOUSLY. CONSULT THE FACTORY FOR APPLICATIONS WITH COMBINED OHL AND THRUST LOAD.
AT SPEEDS ABOVE 1750 RPM, UNITS MAY BECOME THERMALLY LIMITED. FOR EXTENDED OPERATION, LIMIT HP TO 1750 RPM RATING.

SELECTION BY INPUT H.P. @ 1750 RPM

HP	OUTPUT SPEED	OUTPUT TORQUE	RATIO	SERVICE FACTOR	OUTPUT OHL	OUTPUT THRUST	GEAR STAGES	MODEL*	INTEGRAL GEARMOTOR
1/3	24	832	73.76	4.26	1250	1950	3	HB2043	Available
	21	961	85.21	7.56	2050	2850	3	HB2063	
	19	1036	91.94	3.42	1250	1950	3	HB2043	Available
	16	1250	110.88	2.83	1250	1950	3	HB2043	Available
	15	1304	115.64	5.57	2050	2850	3	HB2063	Available
	14	1437	127.45	2.46	1250	1950	3	HB2043	Available
	13	1561	138.46	4.65	2050	2850	3	HB2063	Available
	12	1693	150.16	4.29	2050	2850	5	HB2065	Available
	11.2	1759	155.99	7.79	3300	3370	5	HB2075	Available
	9.2	2142	190	3.39	2050	2850	5	HB2065	Available
	9.1	2157	191.38	6.35	3300	3370	5	HB2075	Available
	7.6	2606	231.14	5.26	3300	3370	5	HB2075	Available
	7.5	2634	233.62	2.76	2050	2850	5	HB2065	Available
	6.2	3204	284.24	2.27	2050	2850	5	HB2065	Available
	6.0	3273	290.33	4.19	3300	3370	5	HB2075	Available
	5.0	3952	350.55	3.47	3300	3370	5	HB2075	Available
	4.9	3994	354.30	1.82	2050	2850	5	HB2065	Available
	4.9	3993	357.41	5.99	4800	3540	5	HB2085	Available
	4.1	4817	427.28	1.51	2050	2850	5	HB2065	Available
	4.1	4848	430.02	2.83	3300	3370	5	HB2075	Available
	3.9	5025	449.80	4.76	4800	3540	5	HB2085	Available
	3.3	5941	531.79	4.02	4800	3540	5	HB2085	Available
	3.3	5960	528.68	1.22	2050	2850	5	HB2065	Available
	3.3	5996	531.87	2.28	3300	3370	5	HB2075	Available
	2.7	7251	643.23	1.00	2050	2850	5	HB2065	Available
	2.7	7355	652.45	1.86	3300	3370	5	HB2075	Available
	2.7	7162	641.10	3.34	4800	3540	5	HB2085	Available
	2.2	8872	794.13	2.69	4800	3540	5	HB2085	Available
	2.2	9174	813.78	1.49	3300	3370	5	HB2075	Available
	1.8	11060	981.05	1.24	3300	3370	5	HB2075	Available
	1.8	11128	987.16	2.15	4800	3540	5	HB2085	Available
	1.6	11526	1077.55	3.30	8000	5350	5	HB2095	
	1.5	13416	1190	1.78	4800	3540	5	HB2085	Available
	1.4	13424	1255	2.83	8000	5350	5	HB2095	
	1.4	13700	1215	1.00	3300	3370	5	HB2075	Available
	1.2	16183	1513	2.35	8000	5350	5	HB2095	
	1.2	16618	1474	1.44	4800	3540	5	HB2085	Available
	1.0	18975	1774	2.00	8000	5350	5	HB2095	
	1.0	19168	1792	3.69	13000	6500	5	HB2105	
	0.9	21059	1868	1.13	4800	3540	5	HB2085	Available
	0.82	22869	2138	1.66	8000	5350	5	HB2095	
	0.81	23104	2160	3.06	13000	6500	5	HB2105	
	0.67	28046	2622	1.35	8000	5350	5	HB2095	
	0.65	28848	2697	2.45	13000	6500	5	HB2105	
	0.53	35512	3320	1.07	8000	5350	5	HB2095	
	0.52	35736	3341	1.98	13000	6500	5	HB2105	
1/2	281	105	6.22	24.03	2050	2850	3	HB2063	
	268	111	6.53	19.99	650	1730	3	HB2043	Available
	239	124	7.31	18.02	675	1730	3	HB2043	Available
	189	156	9.24	15.03	700	1730	3	HB2043	Available
	156	190	11.25	21.32	2050	2850	3	HB2063	
	145	204	12.07	15.17	800	1950	3	HB2043	Available
	130	229	13.51	13.77	770	1950	3	HB2043	Available
	102	289	17.08	11.59	830	1950	3	HB2043	Available
	80	371	21.94	9.53	930	1950	3	HB2043	Available
	70	425	25.10	8.33	1050	1950	3	HB2043	Available
	58	514	30.37	6.89	1150	1950	3	HB2043	Available
	46	650	38.38	5.45	1250	1950	3	HB2043	Available
	35	835	49.31	4.24	1250	1950	3	HB2043	Available
	31	955	56.41	3.71	1250	1950	3	HB2043	Available
	25	1185	69.99	6.13	2050	2850	3	HB2063	
	24	1249	73.76	2.84	1250	1950	3	HB2043	Available
	23	1262	74.56	5.75	2050	2850	3	HB2063	Available
	21	1442	85.21	5.03	2050	2850	3	HB2063	Available
	19	1548	91.47	4.69	2050	2850	3	HB2063	
	19	1556	91.94	2.27	1250	1950	3	HB2043	Available
	16	1803	106.51	4.03	2050	2850	3	HB2063	
	16	1877	110.88	1.89	1250	1950	3	HB2043	Available

* FOR INTEGRAL GEARMOTORS SPECIFY MOUNTING TYPE I AND MOTOR HORSEPOWER (SEE PAGE K-6).
* FOR MOTORIZED REDUCERS SPECIFY MOUNTING TYPE E AND MOTOR PART NUMBER (SEE SECTION H)
ALL TORQUE VALUES LISTED IN INCH-POUNDS, ALL OVERHUNG LOAD AND THRUST LOAD VALUES LISTED IN POUNDS.
THE POINT OF APPLICATION OF OHL IS CONSIDERED TO BE APPLIED AT THE MIDPOINT OF SHAFT EXTENSION.
OHL AND THRUST RATINGS CANNOT BE APPLIED SIMULTANEOUSLY. CONSULT THE FACTORY FOR APPLICATIONS WITH COMBINED OHL AND THRUST LOAD.
AT SPEEDS ABOVE 1750 RPM, UNITS MAY BECOME THERMALLY LIMITED. FOR EXTENDED OPERATION, LIMIT HP TO 1750 RPM RATING.

SELECTION BY INPUT H.P. @ 1750 RPM

HP	OUTPUT SPEED	OUTPUT TORQUE	RATIO	SERVICE FACTOR	OUTPUT OHL	OUTPUT THRUST	GEAR STAGES	MODEL*	INTEGRAL GEARMOTOR
1/2	15	1957	115.64	3.71	2050	2850	3	HB2063	Available
	14	2136	126.17	3.4	2050	2850	3	HB2063	Available
	14	2157	127.45	1.64	1250	1950	3	HB2043	Available
	13	2344	138.46	3.1	2050	2850	3	HB2063	Available
	12	2542	150.16	2.86	2050	2850	5	HB2065	Available
	11.2	2640	155.99	5.19	3300	3370	5	HB2075	Available
	9.2	3216	190	2.26	2050	2850	5	HB2065	Available
	9.1	3239	191.38	4.23	3300	3370	5	HB2075	Available
	7.6	3912	231.14	3.50	3300	3370	5	HB2075	Available
	7.5	3954	233.62	1.84	2050	2850	5	HB2065	Available
	6.2	4811	284.24	1.51	2050	2850	5	HB2065	Available
	6.0	4914	290.33	2.79	3300	3370	5	HB2075	Available
	5.8	5090	300.73	4.70	4800	3540	5	HB2085	Available
	5.0	5934	350.55	2.31	3300	3370	5	HB2075	Available
	4.9	5997	354.30	1.21	2050	2850	5	HB2065	Available
	4.9	6050	357.41	3.95	4800	3540	5	HB2085	Available
	4.1	7232	427.28	1.00	2050	2850	5	HB2065	Available
	4.1	7279	430.02	1.88	3300	3370	5	HB2075	Available
	3.9	7614	449.80	3.14	4800	3540	5	HB2085	Available
	3.3	9001	531.79	2.66	4800	3540	5	HB2085	Available
	3.3	9003	531.87	1.52	3300	3370	5	HB2075	Available
	2.8	10129	624.98	3.75	8000	5350	5	HB2095	
	2.7	11044	652.45	1.24	3300	3370	5	HB2075	Available
	2.7	10852	641.10	2.20	4800	3540	5	HB2085	Available
	2.2	13442	794.13	1.78	4800	3540	5	HB2085	Available
	2.1	13660	842.88	2.78	8000	5350	5	HB2095	
	1.8	16709	987.16	1.43	4800	3540	5	HB2085	Available
	1.6	17463	1077.55	2.18	8000	5350	5	HB2095	
	1.5	19464	1201	3.64	13000	6500	5	HB2105	
	1.5	20144	1190	1.19	4800	3540	5	HB2085	Available
	1.4	20339	1255	1.87	8000	5350	5	HB2095	
	1.2	24520	1513	1.55	8000	5350	5	HB2095	
	1.2	24569	1516	2.88	13000	6500	5	HB2105	
	0.99	28750	1774	1.32	8000	5350	5	HB2095	
	0.98	29042	1792	2.44	13000	6500	5	HB2105	
	0.82	34649	2138	1.10	8000	5350	5	HB2095	
	0.81	35006	2160	2.02	13000	6500	5	HB2105	
	0.65	43709	2697	1.62	13000	6500	5	HB2105	
	0.52	54146	3341	1.31	13000	6500	5	HB2105	
3/4	281	158	6.22	16.02	2050	2850	3	HB2063	
	268	166	6.53	13.33	650	1730	3	HB2043	Available
	239	186	7.31	12.01	675	1730	3	HB2043	Available
	189	235	9.24	10.02	700	1730	3	HB2043	Available
	156	286	11.25	14.21	2050	2850	3	HB2063	
	145	306	12.07	10.12	800	1950	3	HB2043	Available
	130	343	13.51	9.18	770	1950	3	HB2043	Available
	102	434	17.08	7.72	830	1950	3	HB2043	Available
	80	557	21.94	6.35	930	1950	3	HB2043	Available
	70	637	25.10	5.55	1050	1950	3	HB2043	Available
	58	771	30.37	4.59	1150	1950	3	HB2043	Available
	46	974	38.38	3.63	1250	1950	3	HB2043	Available
	35	1252	49.31	2.83	1250	1950	3	HB2043	Available
	31	1432	56.41	2.47	1250	1950	3	HB2043	Available
	25	1777	69.99	4.09	2050	2850	3	HB2063	
	24	1873	73.76	1.89	1250	1950	3	HB2043	Available
	23	1893	74.56	3.84	2050	2850	3	HB2063	
	21	2163	85.21	3.36	2050	2850	3	HB2063	
	19	2322	91.47	3.13	2050	2850	3	HB2063	
	19	2334	91.94	1.52	1250	1950	3	HB2043	Available
	16	2704	106.51	2.68	2050	2850	3	HB2063	
	16	2815	110.88	1.26	1250	1950	3	HB2043	Available
	15	2936	115.64	2.47	2050	2850	3	HB2063	Available
	14	3203	126.17	2.27	2050	2850	3	HB2063	Available
	14	3236	127.45	1.09	1250	1950	3	HB2043	Available
	13	3405	134.10	4.02	3300	3370	3	HB2073	
	13	3516	138.46	2.07	2050	2850	3	HB2063	Available
	12	3813	150.16	1.90	2050	2850	5	HB2065	Available
	11.2	3961	155.99	3.46	3300	3370	5	HB2075	Available

* FOR INTEGRAL GEARMOTORS SPECIFY MOUNTING TYPE I AND MOTOR HORSEPOWER (SEE PAGE K-6).
* FOR MOTORIZED REDUCERS SPECIFY MOUNTING TYPE E AND MOTOR PART NUMBER (SEE SECTION H)
ALL TORQUE VALUES LISTED IN INCH-POUNDS, ALL OVERHUNG LOAD AND THRUST LOAD VALUES LISTED IN POUNDS.
THE POINT OF APPLICATION OF OHL IS CONSIDERED TO BE APPLIED AT THE MIDPOINT OF SHAFT EXTENSION.
OHL AND THRUST RATINGS CANNOT BE APPLIED SIMULTANEOUSLY. CONSULT THE FACTORY FOR APPLICATIONS WITH COMBINED OHL AND THRUST LOAD.
AT SPEEDS ABOVE 1750 RPM, UNITS MAY BECOME THERMALLY LIMITED. FOR EXTENDED OPERATION, LIMIT HP TO 1750 RPM RATING.

SELECTION BY INPUT H.P. @ 1750 RPM

HP	OUTPUT SPEED	OUTPUT TORQUE	RATIO	SERVICE FACTOR	OUTPUT OHL	OUTPUT THRUST	GEAR STAGES	MODEL*	INTEGRAL GEARMOTOR
3/4	9.2	4824	190	1.50	2050	2850	5	HB2065	Available
	9.1	4859	191.38	2.82	3300	3370	5	HB2075	Available
	8.6	5154	202.99	4.64	4800	3540	5	HB2085	Available
	7.7	5753	226.57	4.15	4800	3540	5	HB2085	Available
	7.6	5869	231.14	2.33	3300	3370	5	HB2075	Available
	7.5	5932	233.62	1.22	2050	2850	5	HB2065	Available
	6.2	7217	284.24	1.01	2050	2850	5	HB2065	Available
	6.0	7371	290.33	1.86	3300	3370	5	HB2075	Available
	5.8	7636	300.73	3.13	4800	3540	5	HB2085	Available
	5.0	8900	350.55	1.54	3300	3370	5	HB2075	Available
	4.9	9075	357.41	2.63	4800	3540	5	HB2085	Available
	4.1	10918	430.02	1.25	3300	3370	5	HB2075	Available
	3.9	11420	449.80	2.09	4800	3540	5	HB2085	Available
	3.5	12186	501.29	3.12	8000	5350	5	HB2095	
	3.3	13502	531.79	1.77	4800	3540	5	HB2085	Available
	3.3	13504	531.87	1.01	3300	3370	5	HB2075	Available
	2.8	15193	624.98	2.50	8000	5350	5	HB2095	
	2.7	16278	641.10	1.47	4800	3540	5	HB2085	Available
	2.3	18872	776.32	3.75	13000	6500	5	HB2105	
	2.2	20163	794.13	1.19	4800	3540	5	HB2085	Available
	2.1	20490	842.88	1.85	8000	5350	5	HB2095	
	1.8	23724	975.92	2.98	13000	6500	5	HB2105	
	1.6	26195	1077.55	1.45	8000	5350	5	HB2095	
	1.5	29196	1201	2.42	13000	6500	5	HB2105	
	1.2	36853	1516	1.92	13000	6500	5	HB2105	
	0.98	43563	1792	1.63	13000	6500	5	HB2105	
	0.81	52509	2160	1.35	13000	6500	5	HB2105	
1	281	211	6.22	12.02	2050	2850	3	HB2063	
	268	221	6.53	10	650	1730	3	HB2043	Available
	239	247	7.31	9.01	675	1730	3	HB2043	Available
	189	313	9.24	7.51	700	1730	3	HB2043	Available
	156	381	11.25	10.66	2050	2850	3	HB2063	
	145	409	12.07	7.59	800	1950	3	HB2043	Available
	130	457	13.51	6.89	770	1950	3	HB2043	Available
	102	578	17.08	5.79	830	1950	3	HB2043	Available
	80	743	21.94	4.77	930	1950	3	HB2043	Available
	70	850	25.10	4.17	1050	1950	3	HB2043	Available
	58	1028	30.37	3.44	1150	1950	3	HB2043	Available
	46	1299	38.38	2.72	1250	1950	3	HB2043	Available
	39	1517	44.81	4.78	2050	2850	3	HB2063	Available
	35	1669	49.31	2.12	1250	1950	3	HB2043	Available
	31	1910	56.41	1.85	1250	1950	3	HB2043	Available
	30	1983	58.58	3.66	2050	2850	3	HB2063	Available
	25	2369	69.99	3.06	2050	2850	3	HB2063	Available
	24	2497	73.76	1.42	1250	1950	3	HB2043	Available
	23	2524	74.56	2.88	2050	2850	3	HB2063	Available
	21	2885	85.21	2.52	2050	2850	3	HB2063	Available
	19	3097	91.47	2.34	2050	2850	3	HB2063	Available
	19	3112	91.94	1.14	1250	1950	3	HB2043	Available
	16	3606	106.51	2.01	2050	2850	3	HB2063	Available
	16	3665	108.25	3.74	3300	3370	3	HB2073	Available
	15	3915	115.64	1.85	2050	2850	3	HB2063	Available
	14	4271	126.17	1.7	2050	2850	3	HB2063	Available
	13	4540	134.10	3.02	3300	3370	3	HB2073	Available
	13	4687	138.46	1.55	2050	2850	3	HB2063	Available
	12	5083	150.16	1.43	2050	2850	5	HB2065	Available
	11.2	5281	155.99	2.59	3300	3370	5	HB2075	Available
	11	5460	161.29	4.38	4800	3540	5	HB2085	Available
	9.2	6432	190.00	1.13	2050	2850	5	HB2065	Available
	9.1	6479	191.38	2.11	3300	3370	5	HB2075	Available
	8.6	6872	202.99	3.48	4800	3540	5	HB2085	Available
	7.6	7825	231.14	1.75	3300	3370	5	HB2075	Available
	7.7	7670	226.57	3.12	4800	3540	5	HB2085	Available
	6.0	9829	290.33	1.39	3300	3370	5	HB2075	Available
	5.8	10181	300.73	2.35	4800	3540	5	HB2085	Available
	5.0	11867	350.55	1.15	3300	3370	5	HB2075	Available

* FOR INTEGRAL GEARMOTORS SPECIFY MOUNTING TYPE I AND MOTOR HORSEPOWER (SEE PAGE K-6).
* FOR MOTORIZED REDUCERS SPECIFY MOUNTING TYPE E AND MOTOR PART NUMBER (SEE SECTION H)
ALL TORQUE VALUES LISTED IN INCH-POUNDS, ALL OVERHUNG LOAD AND THRUST LOAD VALUES LISTED IN POUNDS.
THE POINT OF APPLICATION OF OHL IS CONSIDERED TO BE APPLIED AT THE MIDPOINT OF SHAFT EXTENSION.
OHL AND THRUST RATINGS CANNOT BE APPLIED SIMULTANEOUSLY. CONSULT THE FACTORY FOR APPLICATIONS WITH COMBINED OHL AND THRUST LOAD.
AT SPEEDS ABOVE 1750 RPM, UNITS MAY BECOME THERMALLY LIMITED. FOR EXTENDED OPERATION, LIMIT HP TO 1750 RPM RATING.

SELECTION BY INPUT H.P. @ 1750 RPM

HP	OUTPUT SPEED	OUTPUT TORQUE	RATIO	SERVICE FACTOR	OUTPUT OHL	OUTPUT THRUST	GEAR STAGES	MODEL*	INTEGRAL GEARMOTOR
1	4.9	11567	356.87	3.29	8000	5350	5	HB2095	
	4.9	12100	357.41	1.98	4800	3540	5	HB2085	Available
	3.9	14421	444.92	2.64	8000	5350	5	HB2095	
	3.9	15227	449.80	1.57	4800	3540	5	HB2085	Available
	3.5	16248	501.29	2.34	8000	5350	5	HB2095	
	3.3	18003	531.79	1.33	4800	3540	5	HB2085	Available
	2.8	20257	624.98	1.88	8000	5350	5	HB2095	
	2.7	21318	657.70	3.32	13000	6500	5	HB2105	
	2.7	21703	641.10	1.10	4800	3540	5	HB2085	Available
	2.3	25163	776.32	2.81	13000	6500	5	HB2105	
	2.1	27320	842.88	1.39	8000	5350	5	HB2095	
	1.8	31632	975.92	2.24	13000	6500	5	HB2105	
	1.6	34926	1077.55	1.09	8000	5350	5	HB2095	
	1.5	38928	1201	1.82	13000	6500	5	HB2105	
	1.2	49138	1516	1.44	13000	6500	5	HB2105	
	1.0	58084	1792	1.22	13000	6500	5	HB2105	
1-1/2	281	316	6.22	8.01	2050	2850	3	HB2063	
	268	332	6.53	6.66	650	1730	3	HB2043	Available
	239	371	7.31	6.01	675	1730	3	HB2043	Available
	189	469	9.24	5.01	700	1730	3	HB2043	Available
	156	571	11.25	7.11	2050	2850	3	HB2063	
	145	613	12.07	5.06	800	1950	3	HB2043	Available
	130	686	13.51	4.59	770	1950	3	HB2043	Available
	102	867	17.08	3.86	830	1950	3	HB2043	Available
	80	1114	21.94	3.18	930	1950	3	HB2043	Available
	70	1275	25.10	2.78	1050	1950	3	HB2043	Available
	58	1542	30.37	2.3	1150	1950	3	HB2043	Available
	46	1949	38.38	1.82	1250	1950	3	HB2043	Available
	45	1961	38.61	3.65	2050	2850	3	HB2063	Available
	39	2275	44.81	3.19	2050	2850	3	HB2063	Available
	35	2504	49.31	1.41	1250	1950	3	HB2043	Available
	31	2865	56.41	1.24	1250	1950	3	HB2043	Available
	30	2975	58.58	2.44	2050	2850	3	HB2063	Available
	25	3554	69.99	2.04	2050	2850	3	HB2063	Available
	23	3786	74.56	1.92	2050	2850	3	HB2063	Available
	21	4327	85.21	1.68	2050	2850	3	HB2063	Available
	19	4560	89.80	3	3300	3370	3	HB2073	Available
	19	4645	91.47	1.56	2050	2850	3	HB2063	Available
	16	5409	106.51	1.34	2050	2850	3	HB2063	Available
	16	5497	108.25	2.49	3300	3370	3	HB2073	Available
	15	5872	115.64	1.24	2050	2850	3	HB2063	Available
	14	6407	126.17	1.13	2050	2850	3	HB2063	Available
	13	6714	132.22	3.56	4800	3540	3	HB2083	
	13	6810	134.10	2.01	3300	3370	3	HB2073	Available
	13	7031	138.46	1.03	2050	2850	3	HB2063	Available
	11.2	7921	155.99	1.73	3300	3370	5	HB2075	Available
	11	8190	161.29	2.92	4800	3540	5	HB2085	Available
	9.1	9718	191.38	1.41	3300	3370	5	HB2075	Available
	8.6	10308	202.99	2.32	4800	3540	5	HB2085	Available
	7.7	11505	226.57	2.08	4800	3540	5	HB2085	Available
	7.6	11737	231.14	1.17	3300	3370	5	HB2075	Available
	7.2	11846	243.65	3.21	8000	5350	5	HB2095	
	5.8	14599	300.28	2.60	8000	5350	5	HB2095	
	5.8	15271	300.73	1.57	4800	3540	5	HB2085	Available
	4.9	17351	356.87	2.19	8000	5350	5	HB2095	
	4.9	18149	357.41	1.32	4800	3540	5	HB2085	Available
	3.9	21632	444.92	1.76	8000	5350	5	HB2095	
	3.9	22841	449.80	1.05	4800	3540	5	HB2085	Available
	3.8	22205	456.72	3.19	13000	6500	5	HB2105	
	3.5	24372	501.29	1.56	8000	5350	5	HB2095	
	3.2	26390	542.79	2.68	13000	6500	5	HB2105	
	2.8	30386	624.98	1.25	8000	5350	5	HB2095	
	2.7	31977	657.70	2.21	13000	6500	5	HB2105	
	2.3	37744	776.32	1.88	13000	6500	5	HB2105	
	1.8	47449	975.92	1.49	13000	6500	5	HB2105	
	1.5	58392	1201	1.21	13000	6500	5	HB2105	

* FOR INTEGRAL GEARMOTORS SPECIFY MOUNTING TYPE I AND MOTOR HORSEPOWER (SEE PAGE K-6).
* FOR MOTORIZED REDUCERS SPECIFY MOUNTING TYPE E AND MOTOR PART NUMBER (SEE SECTION H)
ALL TORQUE VALUES LISTED IN INCH-POUNDS, ALL OVERHUNG LOAD AND THRUST LOAD VALUES LISTED IN POUNDS.
THE POINT OF APPLICATION OF OHL IS CONSIDERED TO BE APPLIED AT THE MIDPOINT OF SHAFT EXTENSION.
OHL AND THRUST RATINGS CANNOT BE APPLIED SIMULTANEOUSLY. CONSULT THE FACTORY FOR APPLICATIONS WITH COMBINED OHL AND THRUST LOAD.
AT SPEEDS ABOVE 1750 RPM, UNITS MAY BECOME THERMALLY LIMITED. FOR EXTENDED OPERATION, LIMIT HP TO 1750 RPM RATING.

SELECTION BY INPUT H.P. @ 1750 RPM

HP	OUTPUT SPEED	OUTPUT TORQUE	RATIO	SERVICE FACTOR	OUTPUT OHL	OUTPUT THRUST	GEAR STAGES	MODEL*	INTEGRAL GEARMOTOR
2	281	421	6.22	6.01	2050	2850	3	HB2063	
	268	442	6.53	5	650	1730	3	HB2043	Available
	239	495	7.31	4.51	675	1730	3	HB2043	Available
	189	626	9.24	3.76	700	1730	3	HB2043	Available
	156	762	11.25	5.33	2050	2850	3	HB2063	
	145	817	12.07	3.79	800	1950	3	HB2043	Available
	130	915	13.51	3.44	770	1950	3	HB2043	Available
	102	1156	17.08	2.9	830	1950	3	HB2043	Available
	80	1485	21.94	2.38	930	1950	3	HB2043	Available
	70	1699	25.10	2.08	1050	1950	3	HB2043	Available
	58	2056	30.37	1.72	1150	1950	3	HB2043	Available
	57	2066	30.51	3.39	2050	2850	3	HB2063	
	46	2599	38.38	1.36	1250	1950	3	HB2043	Available
	45	2614	38.61	2.74	2050	2850	3	HB2063	Available
	39	3034	44.81	2.39	2050	2850	3	HB2063	Available
	35	3339	49.31	1.06	1250	1950	3	HB2043	Available
	32	3661	54.07	3.74	3300	3370	3	HB2073	
	30	3966	58.58	1.83	2050	2850	3	HB2063	Available
	25	4739	69.99	1.53	2050	2850	3	HB2063	Available
	23	5048	74.56	1.44	2050	2850	3	HB2063	Available
	23	5142	75.95	2.66	3300	3370	3	HB2073	Available
	21	5769	85.21	1.26	2050	2850	3	HB2063	Available
	19	6080	89.80	2.25	3300	3370	3	HB2073	Available
	19	6193	91.47	1.17	2050	2850	3	HB2063	Available
	16	7211	106.51	1.01	2050	2850	3	HB2063	Available
	16	7329	108.25	1.87	3300	3370	3	HB2073	Available
	13	8952	132.22	2.67	4800	3540	3	HB2083	
	13	9079	134.10	1.51	3300	3370	3	HB2073	Available
	11.2	10562	155.99	1.30	3300	3370	5	HB2075	Available
	11	10324	159.26	3.68	8000	5350	5	HB2095	
	11	10920	161.29	2.19	4800	3540	5	HB2085	Available
	9.1	12958	191.38	1.06	3300	3370	5	HB2075	Available
	8.8	12872	198.56	2.95	8000	5350	5	HB2095	
	8.6	13744	202.99	1.74	4800	3540	5	HB2085	Available
	7.7	15340	226.57	1.56	4800	3540	5	HB2085	Available
	7.2	15795	243.65	2.41	8000	5350	5	HB2095	
	5.8	19466	300.28	1.95	8000	5350	5	HB2095	
	5.8	20361	300.73	1.17	4800	3540	5	HB2085	Available
	5.6	20144	310.74	3.51	13000	6500	5	HB2105	
	4.9	23134	356.87	1.64	8000	5350	5	HB2095	
	4.9	24199	357.41	1.00	4800	3540	5	HB2085	Available
	4.7	23940	369.30	2.96	13000	6500	5	HB2105	
	3.9	28842	444.92	1.32	8000	5350	5	HB2095	
	3.8	29607	456.72	2.39	13000	6500	5	HB2105	
	3.5	32496	501.29	1.17	8000	5350	5	HB2095	
	3.2	35187	542.79	2.01	13000	6500	5	HB2105	
	2.7	42636	657.70	1.66	13000	6500	5	HB2105	
	2.3	50325	776.32	1.41	13000	6500	5	HB2105	
	1.8	63265	975.92	1.12	13000	6500	5	HB2105	
3	281	632	6.22	4.01	2050	2850	3	HB2063	Available
	268	663	6.53	3.33	650	1730	3	HB2043	Available
	239	742	7.31	3	675	1730	3	HB2043	Available
	189	938	9.24	2.5	700	1730	3	HB2043	Available
	156	1143	11.25	3.55	2050	2850	3	HB2063	Available
	145	1226	12.07	2.53	800	1950	3	HB2043	Available
	130	1372	13.51	2.3	770	1950	3	HB2043	Available
	103	1733	17.06	3.3	2050	2850	3	HB2063	Available
	102	1735	17.08	1.93	830	1950	3	HB2043	Available
	83	2144	21.11	4.63	3300	3370	3	HB2073	Available
	80	2228	21.94	1.59	930	1950	3	HB2043	Available
	70	2549	25.10	1.39	1050	1950	3	HB2043	Available
	68	2629	25.89	2.47	2050	2850	3	HB2063	Available
	58	3084	30.37	1.15	1150	1950	3	HB2043	Available
	57	3099	30.51	2.26	2050	2850	3	HB2063	Available
	55	3240	31.9	3.7	3300	3370	3	HB2073	Available
	51	3496	34.42	3.46	3300	3370	3	HB2073	Available

* FOR INTEGRAL GEARMOTORS SPECIFY MOUNTING TYPE I AND MOTOR HORSEPOWER (SEE PAGE K-6).
* FOR MOTORIZED REDUCERS SPECIFY MOUNTING TYPE E AND MOTOR PART NUMBER (SEE SECTION H)
ALL TORQUE VALUES LISTED IN INCH-POUNDS, ALL OVERHUNG LOAD AND THRUST LOAD VALUES LISTED IN POUNDS.
THE POINT OF APPLICATION OF OHL IS CONSIDERED TO BE APPLIED AT THE MIDPOINT OF SHAFT EXTENSION.
OHL AND THRUST RATINGS CANNOT BE APPLIED SIMULTANEOUSLY. CONSULT THE FACTORY FOR APPLICATIONS WITH COMBINED OHL AND THRUST LOAD.
AT SPEEDS ABOVE 1750 RPM, UNITS MAY BECOME THERMALLY LIMITED. FOR EXTENDED OPERATION, LIMIT HP TO 1750 RPM RATING.

SELECTION BY INPUT H.P. @ 1750 RPM

HP	OUTPUT SPEED	OUTPUT TORQUE	RATIO	SERVICE FACTOR	OUTPUT OHL	OUTPUT THRUST	GEAR STAGES	MODEL*	INTEGRAL GEARMOTOR
3	45	3921	38.61	1.82	2050	2850	3	HB2063	Available
	45	3928	38.68	3.11	3300	3370	3	HB2073	Available
	42	4255	41.90	3.22	3300	3370	3	HB2073	Available
	39	4551	44.81	1.59	2050	2850	3	HB2063	Available
	37	4819	47.45	2.84	3300	3370	3	HB2073	Available
	32	5491	54.07	2.49	3300	3370	3	HB2073	Available
	30	5949	58.58	1.22	2050	2850	3	HB2063	Available
	25	7108	69.99	1.02	2050	2850	3	HB2063	Available
	23	7606	74.89	3.14	4800	3540	3	HB2083	Available
	23	7714	75.95	1.78	3300	3370	3	HB2073	Available
	20	8992	88.54	2.66	4800	3540	3	HB2083	Available
	19	9120	89.80	1.5	3300	3370	3	HB2073	Available
	16	10841	106.74	2.2	4800	3540	3	HB2083	Available
	16	10994	108.25	1.25	3300	3370	3	HB2073	Available
	13	13428	132.22	1.78	4800	3540	3	HB2083	Available
	13	13619	134.10	1.01	3300	3370	3	HB2073	Available
	11	15486	159.26	2.45	8000	5350	5	HB2095	Available
	11	16381	161.29	1.46	4800	3540	5	HB2085	Available
	8.8	19308	198.56	1.97	8000	5350	5	HB2095	Available
	8.6	20616	202.99	1.16	4800	3540	5	HB2085	Available
	7.7	23011	226.57	1.04	4800	3540	5	HB2085	Available
	7.2	23555	242.24	3.01	13000	6500	5	HB2105	Available
	7.2	23692	243.65	1.60	8000	5350	5	HB2095	Available
	5.8	29199	300.28	1.30	8000	5350	5	HB2095	Available
	5.6	30216	310.74	2.34	13000	6500	5	HB2105	Available
	4.9	34702	356.87	1.10	8000	5350	5	HB2095	Available
	4.7	35910	369.30	1.97	13000	6500	5	HB2105	Available
	3.8	44411	456.72	1.59	13000	6500	5	HB2105	Available
	3.2	52780	542.79	1.34	13000	6500	5	HB2105	Available
	2.7	63954	657.70	1.11	13000	6500	5	HB2105	Available
5	281	1053	6.22	2.4	2050	2850	3	HB2063	Available
	268	1105	6.53	2	650	1730	3	HB2043	Available
	241	1231	7.27	3.74	2830	3370	3	HB2073	
	239	1237	7.31	1.8	675	1730	3	HB2043	Available
	189	1564	9.24	1.5	700	1730	3	HB2043	Available
	185	1598	9.44	2.03	2050	2850	3	HB2063	Available
	156	1904	11.25	2.13	2050	2850	3	HB2063	Available
	154	1925	11.37	3.48	3100	3370	3	HB2073	
	145	2043	12.07	1.52	800	1950	3	HB2043	Available
	130	2282	13.48	2.33	2050	2850	3	HB2063	Available
	130	2287	13.51	1.38	770	1950	3	HB2043	Available
	103	2888	17.06	1.98	2050	2850	3	HB2063	Available
	102	2891	17.08	1.16	830	1950	3	HB2043	Available
	102	2913	17.21	3.25	3300	3370	3	HB2073	Available
	83	3573	21.11	2.78	3300	3370	3	HB2073	Available
	73	4073	24.06	2.76	3300	3370	3	HB2073	Available
	68	4382	25.89	1.48	2050	2850	3	HB2063	Available
	57	5164	30.51	1.36	2050	2850	3	HB2063	Available
	55	5400	31.90	2.22	3300	3370	3	HB2073	Available
	51	5826	34.42	2.08	3300	3370	3	HB2073	Available
	45	6535	38.61	1.09	2050	2850	3	HB2063	Available
	45	6547	38.68	1.86	3300	3370	3	HB2073	Available
	44	6718	39.69	3.35	4700	3540	3	HB2083	
	42	7092	41.9	1.93	3300	3370	3	HB2073	Available
	39	7593	44.86	3.09	4800	3540	3	HB2083	
	37	8032	47.45	1.71	3300	3370	3	HB2073	Available
	33	9024	53.31	2.65	4800	3540	3	HB2083	Available
	32	9152	54.07	1.5	3300	3370	3	HB2073	Available
	23	12676	74.89	1.89	4800	3540	3	HB2083	Available
	23	12856	75.95	1.07	3300	3370	3	HB2073	Available
	23	12968	76.61	2.93	7550	5350	3	HB2093	
	21	14230	84.07	2.67	8000	5350	3	HB2093	
	20	14987	88.54	1.59	4800	3540	3	HB2083	Available
	17	17446	103.07	2.18	8000	5350	3	HB2093	
	16	18068	106.74	1.32	4800	3540	3	HB2083	Available

* FOR INTEGRAL GEARMOTORS SPECIFY MOUNTING TYPE I AND MOTOR HORSEPOWER (SEE PAGE K-6).
* FOR MOTORIZED REDUCERS SPECIFY MOUNTING TYPE E AND MOTOR PART NUMBER (SEE SECTION H)
ALL TORQUE VALUES LISTED IN INCH-POUNDS, ALL OVERHUNG LOAD AND THRUST LOAD VALUES LISTED IN POUNDS.
THE POINT OF APPLICATION OF OHL IS CONSIDERED TO BE APPLIED AT THE MIDPOINT OF SHAFT EXTENSION.
OHL AND THRUST RATINGS CANNOT BE APPLIED SIMULTANEOUSLY. CONSULT THE FACTORY FOR APPLICATIONS WITH COMBINED OHL AND THRUST LOAD.
AT SPEEDS ABOVE 1750 RPM, UNITS MAY BECOME THERMALLY LIMITED. FOR EXTENDED OPERATION, LIMIT HP TO 1750 RPM RATING.

SELECTION BY INPUT H.P. @ 1750 RPM

HP	OUTPUT SPEED	OUTPUT TORQUE	RATIO	SERVICE FACTOR	OUTPUT OHL	OUTPUT THRUST	GEAR STAGES	MODEL*	INTEGRAL GEARMOTOR
5	15	20332	120.12	3.48	12500	6250	3	HB2103	
	15	19537	115.42	1.95	8000	5350	3	HB2093	
	13	23310	137.71	3.04	13000	6500	3	HB2103	
	13	22093	130.52	1.72	8000	5350	3	HB2093	
	13	22381	132.22	1.07	4800	3540	3	HB2083	Available
	11	25810	159.26	1.47	8000	5350	5	HB2095	Available
	11	26710	164.81	2.65	13000	6500	5	HB2105	Available
	9.3	30593	188.77	2.31	13000	6500	5	HB2105	Available
	8.8	32179	198.56	1.18	8000	5350	5	HB2095	Available
	7.2	39258	242.24	1.80	13000	6500	5	HB2105	Available
	5.6	50360	310.74	1.41	13000	6500	5	HB2105	Available
	4.7	59850	369.30	1.18	13000	6500	5	HB2105	Available
7-1/2	281	1579	6.22	1.6	2050	2850	3	HB2063	
	269	1653	6.51	2.63	2750	3370	3	HB2073	
	268	1658	6.53	1.33	650	1730	3	HB2043	
	241	1846	7.27	2.49	2830	3370	3	HB2073	
	239	1856	7.31	1.2	675	1730	3	HB2043	
	235	1894	7.46	1.52	2050	2850	3	HB2063	
	215	2064	8.13	2.29	2950	3370	3	HB2073	
	200	2227	8.77	2.23	2970	3370	3	HB2073	
	189	2346	9.24	1	700	1730	3	HB2043	
	185	2397	9.44	1.36	2050	2850	3	HB2063	
	177	2503	9.86	2.09	3070	3370	3	HB2073	
	156	2856	11.25	1.42	2050	2850	3	HB2063	
	154	2887	11.37	2.32	3100	3370	3	HB2073	
	145	3065	12.07	1.01	800	1950	3	HB2043	
	138	3225	12.7	2.18	3200	3370	3	HB2073	
	130	3423	13.48	1.55	2050	2850	3	HB2063	
	123	3605	14.2	2.4	3100	3370	3	HB2073	
	114	3890	15.32	2.32	3200	3370	3	HB2073	
	103	4332	17.06	1.32	2050	2850	3	HB2063	
	102	4370	17.21	2.17	3300	3370	3	HB2073	
	94	4735	18.65	2.03	3300	3370	3	HB2073	
	88	5027	19.8	1.23	2050	2850	3	HB2063	
	83	5360	21.11	1.85	3300	3370	3	HB2073	
	73	6109	24.06	2.95	4000	3540	3	HB2083	
	73	6109	24.06	1.84	3300	3370	3	HB2073	
	56	7988	31.46	2.57	4500	3540	3	HB2083	
	55	8099	31.9	1.48	3300	3370	3	HB2073	
	52	8617	33.94	2.44	4500	3540	3	HB2083	
	51	8739	34.42	1.38	3300	3370	3	HB2073	
	46	9684	38.14	2.27	4600	3540	3	HB2083	
	45	9821	38.68	1.24	3300	3370	3	HB2073	
	44	10077	39.69	2.23	4700	3540	3	HB2083	
	42	10638	41.9	1.29	3300	3370	3	HB2073	
	39	11390	44.86	2.06	4800	3540	3	HB2083	
	37	12048	47.45	1.14	3300	3370	3	HB2073	
	34	12967	51.07	2.93	6250	5350	3	HB2093	
	33	13535	53.31	1.77	4800	3540	3	HB2083	
	32	13728	54.07	1	3300	3370	3	HB2073	
	29	15102	59.48	2.52	6750	5350	3	HB2093	
	23	19015	74.89	1.26	4800	3540	3	HB2083	
	23	19451	76.61	1.95	7550	5350	3	HB2093	
	21	21566	84.94	3.28	10900	5450	3	HB2103	
	21	21345	84.07	1.78	8000	5350	3	HB2093	
	20	22480	88.54	1.06	4800	3540	3	HB2083	
	19	24001	94.53	2.95	11300	5650	3	HB2103	
	17	26926	106.05	2.63	11900	5950	3	HB2103	
	17	26170	103.07	1.45	8000	5350	3	HB2093	
	15	30499	120.12	2.32	12500	6250	3	HB2103	
	15	29305	115.42	1.3	8000	5350	3	HB2093	
	13	34965	137.71	2.02	13000	6500	3	HB2103	
	13	33139	130.52	1.15	8000	5350	3	HB2093	
	11	40065	164.81	1.77	13000	6500	5	HB2105	
	9.3	45889	188.77	1.54	13000	6500	5	HB2105	
	7.2	58888	242.24	1.20	13000	6500	5	HB2105	

* FOR INTEGRAL GEARMOTORS SPECIFY MOUNTING TYPE I AND MOTOR HORSEPOWER (SEE PAGE K-6).
* FOR MOTORIZED REDUCERS SPECIFY MOUNTING TYPE E AND MOTOR PART NUMBER (SEE SECTION H)
ALL TORQUE VALUES LISTED IN INCH-POUNDS, ALL OVERHUNG LOAD AND THRUST LOAD VALUES LISTED IN POUNDS.
THE POINT OF APPLICATION OF OHL IS CONSIDERED TO BE APPLIED AT THE MIDPOINT OF SHAFT EXTENSION.
OHL AND THRUST RATINGS CANNOT BE APPLIED SIMULTANEOUSLY. CONSULT THE FACTORY FOR APPLICATIONS WITH COMBINED OHL AND THRUST LOAD.
AT SPEEDS ABOVE 1750 RPM, UNITS MAY BECOME THERMALLY LIMITED. FOR EXTENDED OPERATION, LIMIT HP TO 1750 RPM RATING.

SELECTION BY INPUT H.P. @ 1750 RPM

HP	OUTPUT SPEED	OUTPUT TORQUE	RATIO	SERVICE FACTOR	OUTPUT OHL	OUTPUT THRUST	GEAR STAGES	MODEL*
10	281	2106	6.22	1.2	2050	2850	3	HB2063
	269	2204	6.51	1.97	2750	3370	3	HB2073
	268	2211	6.53	1	650	1730	3	HB2043
	265	2234	6.6	3.36	3100	3540	3	HB2083
	241	2461	7.27	1.87	2830	3370	3	HB2073
	237	2495	7.37	3.21	3200	3540	3	HB2083
	235	2525	7.46	1.14	2050	2850	3	HB2063
	230	2576	7.61	5.28	3750	5350	3	HB2093
	215	2752	8.13	1.71	2950	3370	3	HB2073
	212	2790	8.24	2.87	3200	3540	3	HB2083
	200	2969	8.77	1.67	2970	3370	3	HB2073
	197	3010	8.89	2.72	3300	3540	3	HB2083
	185	3196	9.44	1.02	2050	2850	3	HB2063
	185	3209	9.48	5.23	3900	5350	3	HB2093
	177	3338	9.86	1.57	3070	3370	3	HB2073
	175	3382	9.99	2.66	3400	3540	3	HB2083
	162	3663	10.82	5.32	4000	5350	3	HB2093
	156	3809	11.25	1.07	2050	2850	3	HB2063
	154	3849	11.37	2.6	3500	3540	3	HB2083
	154	3849	11.37	1.74	3100	3370	3	HB2073
	140	4245	12.54	5.3	4250	5350	3	HB2093
	138	4299	12.7	3.3	3400	3540	3	HB2083
	138	4299	12.7	1.64	3200	3370	3	HB2073
	130	4563	13.48	1.17	2050	2850	3	HB2063
	123	4807	14.2	3.12	3500	3540	3	HB2083
	123	4807	14.2	1.8	3100	3370	3	HB2073
	114	5186	15.32	2.99	3600	3540	3	HB2083
	114	5186	15.32	1.74	3200	3370	3	HB2073
	112	5291	15.63	4.99	4500	5350	3	HB2093
	102	5826	17.21	2.75	3700	3540	3	HB2083
	102	5826	17.21	1.63	3300	3370	3	HB2073
	98	6036	17.83	4.54	4750	5350	3	HB2093
	98	6063	17.91	2.67	3800	3540	3	HB2083
	94	6314	18.65	1.52	3300	3370	3	HB2073
	86	6852	20.24	2.48	3900	3540	3	HB2083
	83	7146	21.11	1.39	3300	3370	3	HB2073
	77	7715	22.79	3.67	5000	5350	3	HB2093
	73	8145	24.06	2.21	4000	3540	3	HB2083
	73	8145	24.06	1.38	3300	3370	3	HB2073
	66	8988	26.55	3.34	5250	5350	3	HB2093
	56	10650	31.46	1.92	4500	3540	3	HB2083
	55	10799	31.9	1.11	3300	3370	3	HB2073
	52	11490	33.94	1.83	4500	3540	3	HB2083
	51	11652	34.42	1.04	3300	3370	3	HB2073
	50	11855	35.02	2.7	5750	5350	3	HB2093
	46	12912	38.14	1.7	4600	3540	3	HB2083
	44	13436	39.69	1.67	4700	3540	3	HB2083
	44	13524	39.95	2.81	5950	5350	3	HB2093
	39	15187	44.86	1.55	4800	3540	3	HB2083
	34	17289	51.07	2.2	6250	5350	3	HB2093
	33	18047	53.31	1.32	4800	3540	3	HB2083
	29	20688	61.11	3.42	9500	4750	3	HB2103
	29	20136	59.48	1.89	6750	5350	3	HB2093
	23	26006	76.82	2.72	10200	5100	3	HB2103
	23	25935	76.61	1.47	7550	5350	3	HB2093
	21	28755	84.94	2.46	10900	5450	3	HB2103
	21	28461	84.07	1.34	8000	5350	3	HB2093
	19	32002	94.53	2.21	11300	5650	3	HB2103
	17	35902	106.05	1.97	11900	5950	3	HB2103
	17	34893	103.07	1.09	8000	5350	3	HB2093
	15	40665	120.12	1.74	12500	6250	3	HB2103
	13	46620	137.71	1.52	13000	6500	3	HB2103
	11	53420	164.81	1.33	13000	6500	5	HB2105
	9.3	61186	188.77	1.16	13000	6500	5	HB2105

* FOR MOTORIZED REDUCERS SPECIFY MOUNTING TYPE E AND MOTOR PART NUMBER (SEE SECTION H)
ALL TORQUE VALUES LISTED IN INCH-POUNDS, ALL OVERHUNG LOAD AND THRUST LOAD VALUES LISTED IN POUNDS.
THE POINT OF APPLICATION OF OHL IS CONSIDERED TO BE APPLIED AT THE MIDPOINT OF SHAFT EXTENSION.
OHL AND THRUST RATINGS CANNOT BE APPLIED SIMULTANEOUSLY. CONSULT THE FACTORY FOR APPLICATIONS WITH COMBINED OHL AND THRUST LOAD.
AT SPEEDS ABOVE 1750 RPM, UNITS MAY BECOME THERMALLY LIMITED. FOR EXTENDED OPERATION, LIMIT HP TO 1750 RPM RATING.

SELECTION BY INPUT H.P. @ 1750 RPM

HP	OUTPUT SPEED	OUTPUT TORQUE	RATIO	SERVICE FACTOR	OUTPUT OHL	OUTPUT THRUST	GEAR STAGES	MODEL*
15	269	3306	6.51	1.32	2750	3370	3	HB2073
	265	3351	6.6	2.24	3100	3540	3	HB2083
	241	3692	7.27	1.25	2830	3370	3	HB2073
	237	3742	7.37	2.14	3200	3540	3	HB2083
	230	3864	7.61	3.52	3750	5350	3	HB2093
	215	4128	8.13	1.14	2950	3370	3	HB2073
	212	4184	8.24	1.91	3200	3540	3	HB2083
	200	4453	8.77	1.12	2970	3370	3	HB2073
	197	4514	8.89	1.82	3300	3540	3	HB2083
	185	4814	9.48	3.49	3900	5350	3	HB2093
	177	5007	9.86	1.04	3070	3370	3	HB2073
	175	5073	9.99	1.77	3400	3540	3	HB2083
	162	5494	10.82	3.55	4000	5350	3	HB2093
	154	5774	11.37	1.73	3500	3540	3	HB2083
	154	5774	11.37	1.16	3100	3370	3	HB2073
	140	6368	12.54	3.53	4250	5350	3	HB2093
	138	6449	12.7	2.2	3400	3540	3	HB2083
	138	6449	12.7	1.09	3200	3370	3	HB2073
	123	7211	14.2	2.08	3500	3540	3	HB2083
	123	7211	14.2	1.2	3100	3370	3	HB2073
	114	7780	15.32	1.99	3600	3540	3	HB2083
	114	7780	15.32	1.16	3200	3370	3	HB2073
	112	7937	15.63	3.33	4500	5350	3	HB2093
	102	8739	17.21	1.83	3700	3540	3	HB2083
	102	8739	17.21	1.08	3300	3370	3	HB2073
	98	9054	17.83	3.03	4750	5350	3	HB2093
	98	9095	17.91	1.78	3800	3540	3	HB2083
	94	9470	18.65	1.02	3300	3370	3	HB2073
	86	10278	20.24	1.65	3900	3540	3	HB2083
	77	11573	22.79	2.45	5000	5350	3	HB2093
	73	12218	24.06	1.47	4000	3540	3	HB2083
	66	13482	26.55	2.23	5250	5350	3	HB2093
	56	15975	31.46	1.28	4500	3540	3	HB2083
	52	17235	33.94	1.22	4500	3540	3	HB2083
	50	17783	35.02	1.8	5750	5350	3	HB2093
	46	19368	38.14	1.14	4600	3540	3	HB2083
	44	20155	39.69	1.12	4700	3540	3	HB2083
	44	20287	39.95	1.87	5950	5350	3	HB2093
	41	21698	42.73	3.00	8200	4100	3	HB2103
	39	22780	44.86	1.03	4800	3540	3	HB2083
	34	26289	51.77	2.64	8600	4300	3	HB2103
	34	25933	51.07	1.47	6250	5350	3	HB2093
	29	31032	61.11	2.28	9500	4750	3	HB2103
	29	30204	59.48	1.26	6750	5350	3	HB2093
	23	39009	76.82	1.81	10200	5100	3	HB2103
	21	43133	84.94	1.64	10900	5450	3	HB2103
	19	48002	94.53	1.47	11300	5650	3	HB2103
	17	53852	106.05	1.31	11900	5950	3	HB2103
	15	60997	120.12	1.16	12500	6250	3	HB2103
	13	69929	137.71	1.01	13000	6500	3	HB2103
20	265	4469	6.6	1.68	3100	3540	3	HB2083
	237	4990	7.37	1.6	3200	3540	3	HB2083
	230	5152	7.61	2.64	3750	5350	3	HB2093
	212	5579	8.24	1.43	3200	3540	3	HB2083
	197	6019	8.89	1.36	3300	3540	3	HB2083
	185	6419	9.48	2.62	3900	5350	3	HB2093
	175	6764	9.99	1.33	3400	3540	3	HB2083
	162	7326	10.82	2.66	4000	5350	3	HB2093
	154	7698	11.37	1.3	3500	3540	3	HB2083
	140	8490	12.54	2.65	4250	5350	3	HB2093
	138	8599	12.7	1.65	3400	3540	3	HB2083
	123	9614	14.2	1.56	3500	3540	3	HB2083
	114	10373	15.32	1.49	3600	3540	3	HB2083
	112	10583	15.63	2.49	4500	5350	3	HB2093
	102	11652	17.21	1.37	3700	3540	3	HB2083
	98	12072	17.83	2.27	4750	5350	3	HB2093
	98	12126	17.91	1.34	3800	3540	3	HB2083

* FOR MOTORIZED REDUCERS SPECIFY MOUNTING TYPE E AND MOTOR PART NUMBER (SEE SECTION H)
ALL TORQUE VALUES LISTED IN INCH-POUNDS, ALL OVERHUNG LOAD AND THRUST LOAD VALUES LISTED IN POUNDS.
THE POINT OF APPLICATION OF OHL IS CONSIDERED TO BE APPLIED AT THE MIDPOINT OF SHAFT EXTENSION.
OHL AND THRUST RATINGS CANNOT BE APPLIED SIMULTANEOUSLY. CONSULT THE FACTORY FOR APPLICATIONS WITH COMBINED OHL AND THRUST LOAD.
AT SPEEDS ABOVE 1750 RPM, UNITS MAY BECOME THERMALLY LIMITED. FOR EXTENDED OPERATION, LIMIT HP TO 1750 RPM RATING.

SELECTION BY INPUT H.P. @ 1750 RPM

HP	OUTPUT SPEED	OUTPUT TORQUE	RATIO	SERVICE FACTOR	OUTPUT OHL	OUTPUT THRUST	GEAR STAGES	MODEL*
20	86	13704	20.24	1.24	3900	3540	3	HB2083
	77	15430	22.79	1.83	5000	5350	3	HB2093
	73	16290	24.06	1.1	4000	3540	3	HB2083
	66	17976	26.55	1.67	5250	5350	3	HB2093
	64	18457	27.26	3.45	7400	3700	3	HB2103
	60	19682	29.07	3.24	7700	3850	3	HB2103
	53	22546	33.30	2.83	8100	4050	3	HB2103
	50	23711	35.02	1.35	5750	5350	3	HB2093
	44	27049	39.95	1.4	5950	5350	3	HB2093
	41	28931	42.73	2.25	8200	4100	3	HB2103
	34	35052	51.77	1.98	8600	4300	3	HB2103
	34	34578	51.07	1.1	6250	5350	3	HB2093
	29	41376	61.11	1.71	9500	4750	3	HB2103
	23	52012	76.82	1.36	10200	5100	3	HB2103
	21	57510	84.94	1.23	10900	5450	3	HB2103
	19	64003	94.53	1.11	11300	5650	3	HB2103
25	265	5586	6.6	1.34	3100	3540	3	HB2083
	237	6237	7.37	1.28	3200	3540	3	HB2083
	230	6441	7.61	2.11	3750	5350	3	HB2093
	212	6974	8.24	1.15	3200	3540	3	HB2083
	197	7524	8.89	1.09	3300	3540	3	HB2083
	185	8023	9.48	2.09	3900	5350	3	HB2093
	175	8455	9.99	1.06	3400	3540	3	HB2083
	162	9157	10.82	2.13	4000	5350	3	HB2093
	154	9623	11.37	1.04	3500	3540	3	HB2083
	140	10613	12.54	2.12	4250	5350	3	HB2093
	138	10748	12.7	1.32	3400	3540	3	HB2083
	135	10977	12.97	3.47	6000	3000	3	HB2103
	123	12018	14.2	1.25	3500	3540	3	HB2083
	118	12577	14.86	4.62	6850	3425	3	HB2103
	114	12966	15.32	1.2	3600	3540	3	HB2083
	112	13228	15.63	2	4500	5350	3	HB2093
	102	14565	17.21	1.1	3700	3540	3	HB2083
	98	15090	17.83	1.82	4750	5350	3	HB2093
	98	15158	17.91	1.07	3800	3540	3	HB2083
	92	16131	19.06	3.89	6350	3175	3	HB2103
	77	19288	22.79	1.47	5000	5350	3	HB2093
	76	19550	23.10	3.26	6900	3450	3	HB2103
	66	22470	26.55	1.34	5250	5350	3	HB2093
	64	23071	27.26	2.76	7400	3700	3	HB2103
	60	24603	29.07	2.59	7700	3850	3	HB2103
	53	28183	33.30	2.26	8100	4050	3	HB2103
	50	29639	35.02	1.08	5750	5350	3	HB2093
	44	33811	39.95	1.12	5950	5350	3	HB2093
	41	36164	42.73	1.80	8200	4100	3	HB2103
	34	43815	51.77	1.59	8600	4300	3	HB2103
	29	51720	61.11	1.37	9500	4750	3	HB2103
	23	65016	76.82	1.09	10200	5100	3	HB2103
30	265	6703	6.6	1.12	3100	3540	3	HB2083
	237	7485	7.37	1.07	3200	3540	3	HB2083
	230	7729	7.61	1.76	3750	5350	3	HB2093
	185	9628	9.48	1.74	3900	5350	3	HB2093
	162	10989	10.82	1.77	4000	5350	3	HB2093
	154	11537	11.36	3.26	5750	2875	3	HB2103
	140	12736	12.54	1.77	4250	5350	3	HB2093
	138	12898	12.7	1.1	3400	3540	3	HB2083
	135	13172	12.97	2.89	6000	3000	3	HB2103
	123	14422	14.2	1.04	3500	3540	3	HB2083
	118	15092	14.86	3.85	6850	3425	3	HB2103
	114	15559	15.32	1	3600	3540	3	HB2083
	112	15874	15.63	1.66	4500	5350	3	HB2093
	98	18108	17.83	1.51	4750	5350	3	HB2093
	92	19357	19.06	3.24	6350	3175	3	HB2103
	77	23146	22.79	1.22	5000	5350	3	HB2093
	76	23460	23.10	2.72	6900	3450	3	HB2103
	66	26964	26.55	1.11	5250	5350	3	HB2093
	64	27685	27.26	2.30	7400	3700	3	HB2103
	60	29524	29.07	2.16	7700	3850	3	HB2103

* FOR MOTORIZED REDUCERS SPECIFY MOUNTING TYPE E AND MOTOR PART NUMBER (SEE SECTION H)
ALL TORQUE VALUES LISTED IN INCH-POUNDS, ALL OVERHUNG LOAD AND THRUST LOAD VALUES LISTED IN POUNDS.
THE POINT OF APPLICATION OF OHL IS CONSIDERED TO BE APPLIED AT THE MIDPOINT OF SHAFT EXTENSION.
OHL AND THRUST RATINGS CANNOT BE APPLIED SIMULTANEOUSLY. CONSULT THE FACTORY FOR APPLICATIONS WITH COMBINED OHL AND THRUST LOAD.
AT SPEEDS ABOVE 1750 RPM, UNITS MAY BECOME THERMALLY LIMITED. FOR EXTENDED OPERATION, LIMIT HP TO 1750 RPM RATING.

SELECTION BY INPUT H.P. @ 1750 RPM

HP	OUTPUT SPEED	OUTPUT TORQUE	RATIO	SERVICE FACTOR	OUTPUT OHL	OUTPUT THRUST	GEAR STAGES	MODEL*
30	53	33820	33.30	1.88	8100	4050	3	HB2103
	41	43397	42.73	1.50	8200	4100	3	HB2103
	34	52578	51.77	1.32	8600	4300	3	HB2103
	29	62063	61.11	1.14	9500	4750	3	HB2103
40	245	9655	7.13	3.26	5550	2775	3	HB2103
	230	10305	7.61	1.32	3750	5350	3	HB2093
	215	11023	8.14	3.08	5600	2800	3	HB2103
	188	12634	9.33	2.89	5650	2825	3	HB2103
	185	12837	9.48	1.31	3900	5350	3	HB2093
	162	14652	10.82	1.33	4000	5350	3	HB2093
	154	15383	11.36	2.44	5750	2875	3	HB2103
	140	16981	12.54	1.33	4250	5350	3	HB2093
	135	17563	12.97	2.17	6000	3000	3	HB2103
	118	20122	14.86	2.89	6850	3425	3	HB2103
	112	21165	15.63	1.25	4500	5350	3	HB2093
	98	24144	17.83	1.13	4750	5350	3	HB2093
	92	25810	19.06	2.43	6350	3175	3	HB2103
	76	31281	23.10	2.04	6900	3450	3	HB2103
	64	36914	27.26	1.73	7400	3700	3	HB2103
	60	39365	29.07	1.62	7700	3850	3	HB2103
	53	45093	33.30	1.41	8100	4050	3	HB2103
	41	57862	42.73	1.13	8200	4100	3	HB2103
50	245	12069	7.13	2.61	5550	2775	3	HB2103
	230	12881	7.61	1.06	3750	5350	3	HB2093
	215	13778	8.14	2.47	5600	2800	3	HB2103
	188	15793	9.33	2.31	5650	2825	3	HB2103
	185	16047	9.48	1.05	3900	5350	3	HB2093
	162	18315	10.82	1.06	4000	5350	3	HB2093
	154	19229	11.36	1.96	5750	2875	3	HB2103
	140	21226	12.54	1.06	4250	5350	3	HB2093
	135	21954	12.97	1.74	6000	3000	3	HB2103
	118	25153	14.86	2.31	6850	3425	3	HB2103
	112	26456	15.63	1.00	4500	5350	3	HB2093
	92	32262	19.06	1.94	6350	3175	3	HB2103
	76	39101	23.10	1.63	6900	3450	3	HB2103
	64	46142	27.26	1.38	7400	3700	3	HB2103
	60	49206	29.07	1.29	7700	3850	3	HB2103
	53	56366	33.30	1.13	8100	4050	3	HB2103

* FOR MOTORIZED REDUCERS SPECIFY MOUNTING TYPE E AND MOTOR PART NUMBER (SEE SECTION H)
ALL TORQUE VALUES LISTED IN INCH-POUNDS, ALL OVERHUNG LOAD AND THRUST LOAD VALUES LISTED IN POUNDS.
THE POINT OF APPLICATION OF OHL IS CONSIDERED TO BE APPLIED AT THE MIDPOINT OF SHAFT EXTENSION.
OHL AND THRUST RATINGS CANNOT BE APPLIED SIMULTANEOUSLY. CONSULT THE FACTORY FOR APPLICATIONS WITH COMBINED OHL AND THRUST LOAD.
AT SPEEDS ABOVE 1750 RPM, UNITS MAY BECOME THERMALLY LIMITED. FOR EXTENDED OPERATION, LIMIT HP TO 1750 RPM RATING.

DIMENSIONS SHOWN ARE FOR REFERENCE ONLY.
CERTIFIED PRINTS ARE AVAILABLE UPON REQUEST.

INTEGRAL TRIPLE REDUCTION

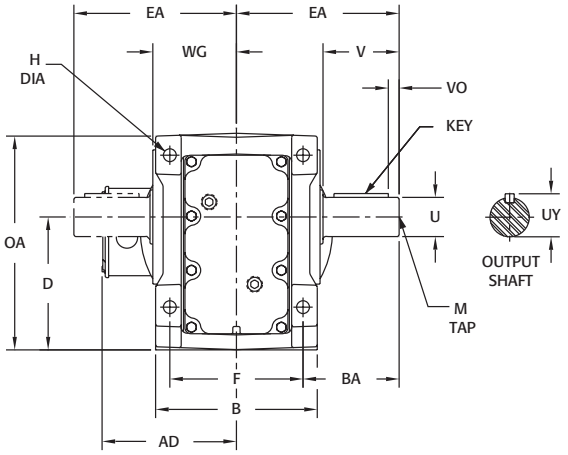

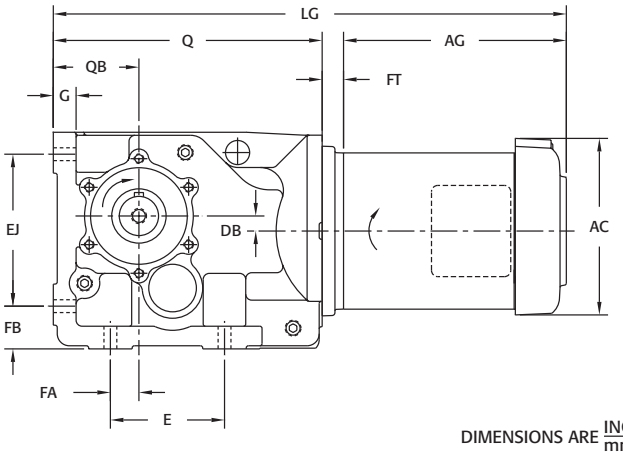

DIMENSIONS ARE INCH / mm

GEARCASE

MODEL	B	BA	D	DB	E	EA	EJ	F	FA	FB	G	H
HB2043I*	5.71	2.95	4.41 +0 -.02	0.47	5.12	5.31	5.12	4.72	1.38	1.46	0.71	0.43
	145	75	112 +0 -.5	12.0	130	135	130	120	35	37	18	11.0
HB2063I*	6.69	3.98	5.51 +0 -.02	0.62	4.72	6.73	6.30	5.51	1.18	1.77	0.94	0.53
	170	101	140 +0 -.5	15.8	120	171	160	140	30	45	24	13.5
HB2073I*	7.87	4.86	7.09 +0 -.02	1.08	5.91	8.11	7.87	6.50	1.57	2.17	1.06	0.69
	200	123.5	180 +0 -.5	27.3	150	206	200	165	40	55	27	17.5
HB2083I*	9.06	5.91	8.35 +0 -.04	1.22	7.09	9.45	9.17	7.09	2.17	2.76	1.26	0.87
	230	150	212 +0 -1	30.9	180	240	233	180	55	70	32	22

GEARCASE

MODEL	OA	Q	QB	WG
HB2043I*	7.48	9.82	2.80	2.85
	190	249	71	72.5
HB2063I*	8.98	11.13	3.54	3.46
	228	283	90	87.9
HB2073I*	11.34	13.21	4.41	3.98
	288	335	112	101
HB2083I*	13.54	16.61	5.20	4.57
	344	422	132	116

OUTPUT SHAFT

U	UY	V	VO	KEY	M
1.250 +0 -.001	1.36	2.36	0.29	1/4 x 1/4 x 1-11/16	1/2-13 x 1.13
-	-	-	-	-	-
1.625 +0 -.001	1.78	3.15	0.45	3/8 x 3/8 x 2-1/4	5/8-11 x 1.38
-	-	-	-	-	-
2.000 +0 -.001	2.21	3.94	0.64	1/2 x 1/2 x 2-5/8	3/4-10 x 1.61
-	-	-	-	-	-
2.375 +0 -.001	2.64	4.72	0.51	5/8 x 5/8 x 3-5/8	3/4-10 x 1.61
-	-	-	-	-	-

MOTOR

MODEL	MOTOR HP	AC	AD	AG	FT	LG
HB2043I*	0.25	6.38	4.58	6.99	0.55	17.36
	0.33	6.38	4.58	7.24	0.55	17.61
	0.50	6.38	4.58	7.74	0.55	18.11
	0.75	6.38	4.58	8.24	0.55	18.61
	1.00	7.68	5.56	9.22	0.73	19.77
	1.50	7.68	5.56	9.22	0.73	19.77
	2.00	7.68	5.56	10.72	0.73	21.27
	3.00	9.78	7.19	10.07	1.78	21.67
	5.00	9.78	7.19	11.57	1.78	23.17
HB2063I*	0.25	6.38	4.58	6.99	0.71	18.83
	0.33	6.38	4.58	7.24	0.71	19.08
	0.50	6.38	4.58	7.74	0.71	19.58
	0.75	6.38	4.58	8.24	0.71	20.08
	1.00	7.68	5.56	9.22	0.88	21.23
	1.50	7.68	5.56	9.22	0.88	21.23
	2.00	7.68	5.56	10.72	0.88	22.73
	3.00	9.78	7.19	10.07	1.94	23.14
	5.00	9.78	7.19	11.57	1.94	24.64
HB2073I*	1.00	7.68	5.56	9.22	0.57	23.00
	1.50	7.68	5.56	9.22	0.57	23.00
	2.00	7.68	5.56	10.72	0.57	24.50
	3.00	9.78	7.19	10.07	1.63	24.90
	5.00	9.78	7.19	11.57	1.63	26.40
HB2083I*	3.00	9.78	7.19	10.07	1.47	28.15
	5.00	9.78	7.19	11.57	1.47	29.65

*OUTPUT STYLES

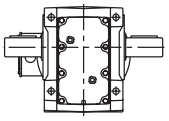

D: Double Ext.

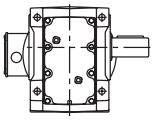

L: Left Ext.

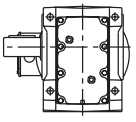

R: Right Ext.

DIMENSIONS SUBJECT TO CHANGE WITHOUT NOTICE

WARNING FOR SAFETY AND TO COMPLY WITH LOCAL AND NATIONAL SAFETY CODES, THE PURCHASER OR USER MUST PROVIDE PROTECTIVE GUARDS OVER ALL SHAFT EXTENSIONS AND DEVICES MOUNTED THEREON.

DIMENSIONS SHOWN ARE FOR REFERENCE ONLY.
CERTIFIED PRINTS ARE AVAILABLE UPON REQUEST.

INTEGRAL TRIPLE REDUCTION

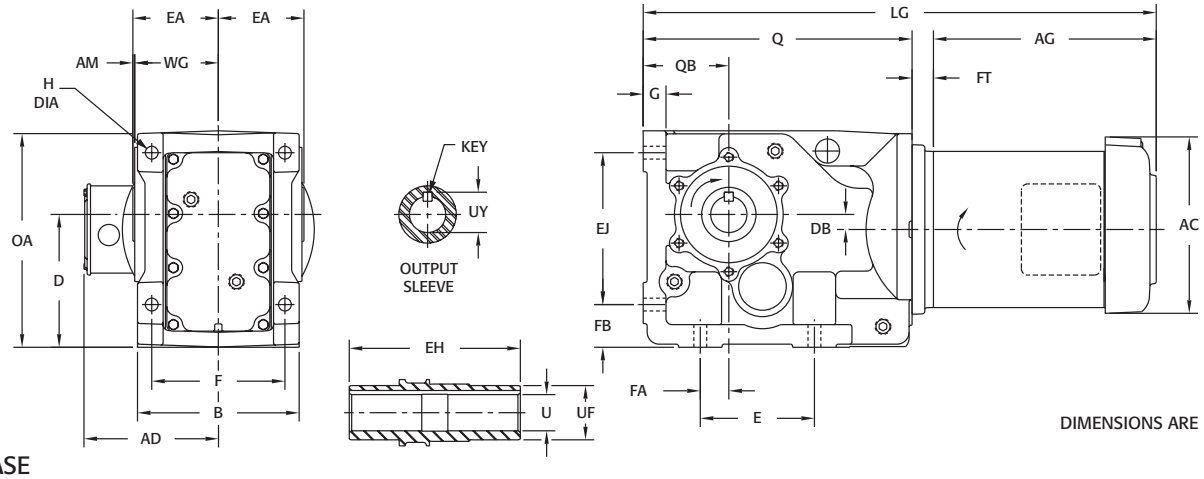

DIMENSIONS ARE INCH / mm

GEARCASE

MODEL	AM	B	D	DB	E	EA	EJ	F	FA	FB	G	H
HB2043IS	0.10	5.71	4.41 +0 -.02	0.47	5.12	2.95	5.12	4.72	1.38	1.46	0.71	0.43
	2.5	145	112 +0 -.5	12.0	130	75	130	120	35	37	18	11.0
HB2063IS	0.08	6.69	5.51 +0 -.02	0.62	4.72	3.54	6.30	5.51	1.18	1.77	0.94	0.53
	2.0	170	140 +0 -.5	15.8	120	90	160	140	30	45	24	13.5
HB2073IS	0.16	7.87	7.09 +0 -.02	1.08	5.91	4.14	7.87	6.50	1.57	2.17	1.06	0.69
	4	200	180 +0 -.5	27.3	150	105	200	165	40	55	27	17.5
HB2083IS	0.16	9.06	8.35 +0 -.04	1.22	7.09	4.73	9.17	7.09	2.17	2.76	1.26	0.87
	4	230	212 +0 -1	30.9	180	120	233	180	55	70	32	22

GEARCASE

MODEL	OA	Q	QB	WG
HB2043IS	7.48	9.82	2.80	2.85
	190	249	71	72.5
HB2063IS	8.98	11.13	3.54	3.46
	228	283	90	87.9
HB2073IS	11.34	13.21	4.41	3.98
	288	335	112	101
HB2083IS	13.54	16.61	5.20	4.57
	344	422	132	116

OUTPUT SLEEVE

EH	U	UF	UY	KEY
5.91	1.375 +.0025 -0	1.97	1.52	(2) 5/16 x 5/16 x 1-3/4
-	-	-	-	-
7.08	1.500 +.0025 -0	2.25	1.67	(2) 3/8 x 3/8 x 2-1/4
-	-	-	-	-
8.27	2.000 +.0025 -0	2.75	2.23	(2) 1/2 x 1/2 x 2-5/8
-	-	-	-	-
9.45	2.375 +.0025 -0	3.34	2.65	(2) 5/8 x 5/8 x 3-5/8
-	-	-	-	-

MOTOR

MODEL	MOTOR HP	AC	AD	AG	FT	LG
HB2043IS	0.25	6.38	4.58	6.99	0.55	17.36
	0.33	6.38	4.58	7.24	0.55	17.61
	0.50	6.38	4.58	7.74	0.55	18.11
	0.75	6.38	4.58	8.24	0.55	18.61
	1.00	7.68	5.56	9.22	0.73	19.77
	1.50	7.68	5.56	9.22	0.73	19.77
	2.00	7.68	5.56	10.72	0.73	21.27
	3.00	9.78	7.19	10.07	1.78	21.67
	5.00	9.78	7.19	11.57	1.78	23.17
HB2063IS	0.25	6.38	4.58	6.99	0.71	18.83
	0.33	6.38	4.58	7.24	0.71	19.08
	0.50	6.38	4.58	7.74	0.71	19.58
	0.75	6.38	4.58	8.24	0.71	20.08
	1.00	7.68	5.56	9.22	0.88	21.23
	1.50	7.68	5.56	9.22	0.88	21.23
	2.00	7.68	5.56	10.72	0.88	22.73
	3.00	9.78	7.19	10.07	1.94	23.14
	5.00	9.78	7.19	11.57	1.94	24.64
HB2073IS	1.00	7.68	5.56	9.22	0.57	23.00
	1.50	7.68	5.56	9.22	0.57	23.00
	2.00	7.68	5.56	10.72	0.57	24.50
	3.00	9.78	7.19	10.07	1.63	24.90
	5.00	9.78	7.19	11.57	1.63	26.40
HB2083IS	3.00	9.78	7.19	10.07	1.47	28.15
	5.00	9.78	7.19	11.57	1.47	29.65

OUTPUT STYLE

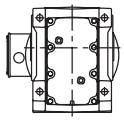

S: Sleeve
(Hollow Bore)

DIMENSIONS SUBJECT TO CHANGE WITHOUT NOTICE

WARNING FOR SAFETY AND TO COMPLY WITH LOCAL AND NATIONAL SAFETY CODES, THE PURCHASER OR USER MUST PROVIDE PROTECTIVE GUARDS OVER ALL SHAFT EXTENSIONS AND DEVICES MOUNTED THEREON.

INTEGRAL QUIN REDUCTION

DIMENSIONS SHOWN ARE FOR REFERENCE ONLY.
CERTIFIED PRINTS ARE AVAILABLE UPON REQUEST.

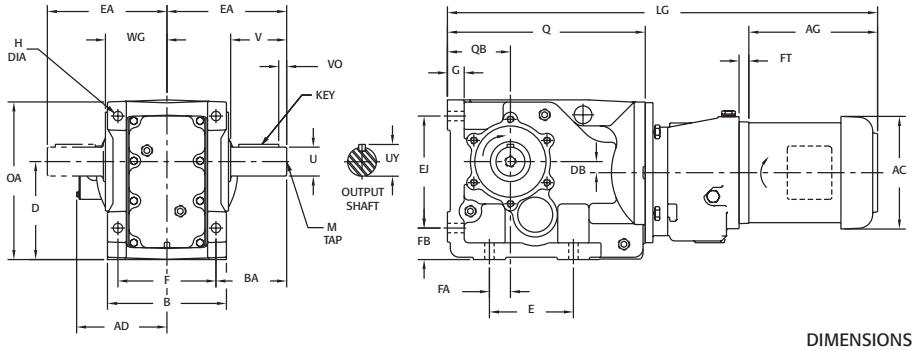

GEARCASE

DIMENSIONS ARE INCH / mm

MODEL	B	BA	D	DB	E	EA	EJ	F	FA	FB	G	H
HB2065I*	6.69	3.98	5.51 +0 -.02	0.62	4.72	6.73	6.30	5.51	1.18	1.77	0.94	0.53
	170	101	140 +0 -.5	15.8	120	171	160	140	30	45	24	13.5
HB2075I*	7.87	4.86	7.09 +0 -.02	1.08	5.91	8.11	7.87	6.50	1.57	2.17	1.06	0.69
	200	123.5	180 +0 -.5	27.3	150	206	200	165	40	55	27	17.5
HB2085I*	9.06	5.91	8.35 +0 -.04	1.22	7.09	9.45	9.17	7.09	2.17	2.76	1.26	0.87
	230	150	212 +0 -1	30.9	180	240	233	180	55	70	32	22
HB2095I*	11.42	6.73	10.43 +0 -.04	1.15	9.45	11.46	11.61	9.45	2.95	2.95	1.42	1.02
	290	171	265 +0 -1	29.2	240	291	295	240	75	75	36	26
HB2105I*	13.38	8.34	12.40 +0 -.04	1.65	11.02	13.65	14.17	10.63	3.74	3.74	1.57	1.31
	340	212	315 +0 -1	42	280	347	360	270	95	95	10	33

GEARCASE

MODEL	OA	Q	QB	WG
HB2065I*	8.98	11.13	3.54	3.46
	228	283	90	87.9
HB2075I*	11.34	13.21	4.41	3.98
	288	335	112	101
HB2085I*	13.54	16.61	5.20	4.57
	344	422	132	116
HB2095I*	16.56	20.29	6.30	5.75
	421	515	160	146
HB2105I*	19.82	23.66	7.87	6.81
	503	601	200	173

OUTPUT SHAFT

U	UY	V	VO	KEY	M
1.625 +0 -.001	1.78	3.15	0.45	3/8 x 3/8 x 2-1/4	5/8-11 x 1.38
-	-	-	-	-	-
2.000 +0 -.001	2.21	3.94	0.64	1/2 x 1/2 x 2-5/8	3/4-10 x 1.61
-	-	-	-	-	-
2.375 +0 -.001	2.64	4.72	0.51	5/8 x 5/8 x 3-5/8	3/4-10 x 1.61
-	-	-	-	-	-
2.875 +0 -.001	3.20	5.51	0.67	3/4 x 3/4 x 4-1/8	3/4-10 x 1.81
-	-	-	-	-	-
3.625 +0 -.001	4.00	6.69	0.19	7/8 x 7/8 x 6-5/16	1-8 x 2.13
-	-	-	-	-	-

MOTOR

MODEL	MOTOR HP	AC	AD	AG	FT	LG
HB2065I*	0.25	6.38	4.58	6.99	0.55	23.99
	0.33	6.38	4.58	7.24	0.55	24.24
	0.50	6.38	4.58	7.74	0.55	24.74
	0.75	6.38	4.58	8.24	0.55	25.24
	1.00	7.68	5.56	9.22	0.73	26.40
HB2075I*	0.25	6.38	4.58	6.99	0.71	26.55
	0.33	6.38	4.58	7.24	0.71	26.80
	0.50	6.38	4.58	7.74	0.71	27.30
	0.75	6.38	4.58	8.24	0.71	27.80
	1.00	7.68	5.56	9.22	0.88	28.95
	1.50	7.68	5.56	9.22	0.88	28.95
	2.00	7.68	5.56	10.72	0.88	30.45
HB2085I*	0.25	6.38	4.58	6.99	0.39	31.63
	0.33	6.38	4.58	7.24	0.39	31.88
	0.50	6.38	4.58	7.74	0.39	32.38
	0.75	6.38	4.58	8.24	0.39	32.88
	1.00	7.68	5.56	9.22	0.57	34.04
	1.50	7.68	5.56	9.22	0.57	34.04
	2.00	7.68	5.56	10.72	0.57	35.54
	3.00	9.78	7.19	10.07	1.63	35.95
HB2095I*	3.00	9.78	7.19	10.07	1.47	40.88
	5.00	9.78	7.19	11.57	1.47	42.38
HB2105I*	3.00	9.78	7.19	10.07	1.47	44.25
	5.00	9.78	7.19	11.57	1.47	45.75

*OUTPUT STYLES

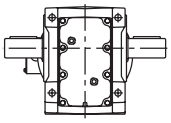

D: Double Ext.

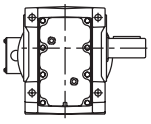

L: Left Ext.

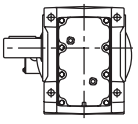

R: Right Ext.

DIMENSIONS SUBJECT TO CHANGE WITHOUT NOTICE

WARNING FOR SAFETY AND TO COMPLY WITH LOCAL AND NATIONAL SAFETY CODES, THE PURCHASER OR USER MUST PROVIDE PROTECTIVE GUARDS OVER ALL SHAFT EXTENSIONS AND DEVICES MOUNTED THEREON.

INTEGRAL QUIN REDUCTION

DIMENSIONS SHOWN ARE FOR REFERENCE ONLY.
CERTIFIED PRINTS ARE AVAILABLE UPON REQUEST.

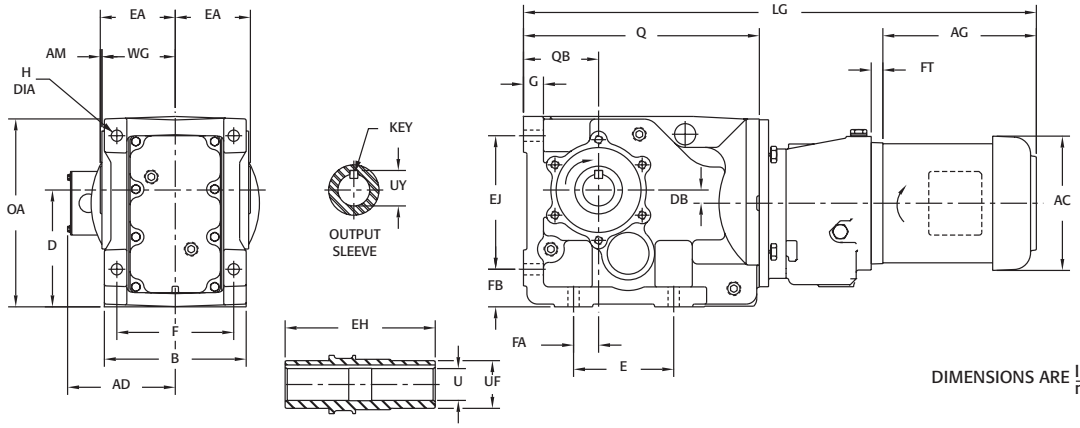

DIMENSIONS ARE INCH / mm

GEARCASE

MODEL	AM	B	D	DB	E	EA	EJ	F	FA	FB	G	H
HB2065IS	0.08	6.69	5.51 +0 -.02	0.62	4.72	3.54	6.30	5.51	1.18	1.77	0.94	0.53
	2.0	170	140 +0 -.5	15.8	120	90	160	140	30	45	24	13.5
HB2075IS	0.16	7.87	7.09 +0 -.02	1.08	5.91	4.14	7.87	6.50	1.57	2.17	1.06	0.69
	4	200	180 +0 -.5	27.3	150	105	200	165	40	55	27	17.5
HB2085IS	0.16	9.06	8.35 +0 -.04	1.22	7.09	4.73	9.17	7.09	2.17	2.76	1.26	0.87
	4	230	212 +0 -1	30.9	180	120	233	180	55	70	32	22
HB2095IS	0.16	11.42	10.43 +0 -.04	1.15	9.45	4.73	11.61	9.45	2.95	2.95	1.42	1.02
	4	290	265 +0 -1	29.2	240	120	295	240	75	75	36	26
HB2105IS	0.08	13.38	12.40 +0 -.04	1.65	11.02	6.89	14.17	10.63	3.74	3.74	1.57	1.31
	2	340	315 +0 -1	42	280	175	360	270	95	95	10	33

GEARCASE

MODEL	OA	Q	QB	WG
HB2065IS	8.98	11.13	3.54	3.46
	228	283	90	87.9
HB2075IS	11.34	13.21	4.41	3.98
	288	335	112	101
HB2085IS	13.54	16.61	5.20	4.57
	344	422	132	116
HB2095IS	16.56	20.29	6.30	5.75
	421	515	160	146
HB2105IS	19.82	23.66	7.87	6.81
	503	601	200	173

OUTPUT SLEEVE

EH	U	UF	UY	KEY
7.08	1.500 +.0025 -0	2.25	1.67	(2) 3/8 x 3/8 x 2-1/4
-	-	-	-	-
8.27	2.000 +.0025 -0	2.75	2.23	(2) 1/2 x 1/2 x 2-5/8
-	-	-	-	-
9.45	2.375 +.0025 -0	3.34	2.65	(2) 5/8 x 5/8 x 3-5/8
-	-	-	-	-
11.81	2.750 +.0025 -0	3.74	3.04	(2) 5/8 x 5/8 x 3-5/8
-	-	-	-	-
13.78	3.625 +.0025 -0	5.25	4.02	(2) 7/8 x 7/8 x 5-3/8
-	-	-	-	-

MOTOR

MODEL	MOTOR HP	AC	AD	AG	FT	LG
HB2065IS	0.25	6.38	4.58	6.99	0.55	23.99
	0.33	6.38	4.58	7.24	0.55	24.24
	0.50	6.38	4.58	7.74	0.55	24.74
	0.75	6.38	4.58	8.24	0.55	25.24
	1.00	7.68	5.56	9.22	0.73	26.40
HB2075IS	0.25	6.38	4.58	6.99	0.71	26.55
	0.33	6.38	4.58	7.24	0.71	26.80
	0.50	6.38	4.58	7.74	0.71	27.30
	0.75	6.38	4.58	8.24	0.71	27.80
	1.00	7.68	5.56	9.22	0.88	28.95
	1.50	7.68	5.56	9.22	0.88	28.95
	2.00	7.68	5.56	10.72	0.88	30.45
HB2085IS	0.25	6.38	4.58	6.99	0.39	31.63
	0.33	6.38	4.58	7.24	0.39	31.88
	0.50	6.38	4.58	7.74	0.39	32.38
	0.75	6.38	4.58	8.24	0.39	32.88
	1.00	7.68	5.56	9.22	0.57	34.04
	1.50	7.68	5.56	9.22	0.57	34.04
	2.00	7.68	5.56	10.72	0.57	35.54
	3.00	9.78	7.19	10.07	1.63	35.95
HB2095IS	3.00	9.78	7.19	10.07	1.47	40.88
	5.00	9.78	7.19	11.57	1.47	42.38
HB2105IS	3.00	9.78	7.19	10.07	1.47	44.25
	5.00	9.78	7.19	11.57	1.47	45.75

OUTPUT STYLE

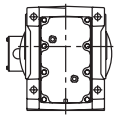

S: Sleeve
(Hollow Bore)

DIMENSIONS SUBJECT TO CHANGE WITHOUT NOTICE

WARNING FOR SAFETY AND TO COMPLY WITH LOCAL AND NATIONAL SAFETY CODES, THE PURCHASER OR USER MUST PROVIDE PROTECTIVE GUARDS OVER ALL SHAFT EXTENSIONS AND DEVICES MOUNTED THEREON.

RATINGS @ 1750 RPM INPUT 1.00 SERVICE FACTOR

FOR MOTOR SELECTION REFER TO SECTION H

RATIO	OUTPUT SPEED	INPUT H.P.	OUTPUT TORQUE	OUTPUT OHL	INPUT OHL	OUTPUT THRUST
HB2043						
6.53	268	10	2210	650	140	1730
7.31	239	9.0	2230	675	140	1730
9.24	189	7.5	2350	700	140	1730
12.07	145	7.6	3100	800	140	1950
13.51	130	6.9	3150	770	140	1950
17.08	102	5.8	3350	830	140	1950
21.94	80	4.8	3540	930	140	1950
25.10	70	4.2	3540	1050	140	1950
30.37	58	3.4	3540	1150	140	1950
38.38	46	2.7	3540	1250	140	1950
49.31	35	2.1	3540	1250	140	1950
56.41	31	1.9	3540	1250	140	1950
73.76	24	1.4	3540	1250	140	1950
91.94	19	1.1	3540	1250	140	1950
110.88	16	0.9	3540	1250	140	1950
127.45	14	0.8	3540	1250	140	1950
HB2063						
6.22	281	12	2530	2050	200	2850
7.46	235	11	2880	2050	200	2850
9.44	185	10	3250	2050	200	2850
11.25	156	11	4060	2050	200	2850
13.48	130	12	5320	2050	200	2850
17.06	103	9.9	5720	2050	200	2850
19.80	88	9.2	6200	2050	200	2850
25.89	68	7.4	6500	2050	200	2850
30.51	57	6.8	7000	2050	200	2850
38.61	45	5.5	7150	2050	200	2850
44.81	39	4.8	7250	2050	200	2850
58.58	30	3.7	7260	2050	200	2850
69.99	25	3.1	7260	2050	200	2850
74.56	23	2.9	7260	2050	200	2850
85.21	21	2.5	7260	2050	200	2850
91.47	19	2.3	7260	2050	200	2850
106.51	16	2.0	7260	2050	200	2850
115.64	15	1.9	7260	2050	200	2850
126.17	14	1.7	7260	2050	200	2850
138.46	13	1.5	7260	2050	200	2850
HB2065						
150.16	12	1.4	7260	2050	140	2850
190.00	9.2	1.1	7260	2050	140	2850
233.62	7.5	0.92	7260	2050	140	2850
284.24	6.2	0.75	7260	2050	140	2850
354.30	4.9	0.61	7260	2050	140	2850
427.28	4.1	0.50	7260	2050	140	2850
528.68	3.3	0.41	7260	2050	140	2850
643.23	2.7	0.33	7260	2050	140	2850
801.79	2.2	0.27	7260	2050	140	2850
975.94	1.8	0.22	7260	2050	140	2850
1217	1.4	0.18	7260	2050	140	2850
1467	1.2	0.15	7260	2050	140	2850
1867	0.94	0.11	7260	2050	140	2850
2212	0.79	0.10	7260	2050	140	2850
2667	0.66	0.08	7260	2050	140	2850
3329	0.53	0.06	7260	2050	140	2850

ALL TORQUE VALUES LISTED IN INCH-POUNDS, ALL OVERHUNG LOAD AND THRUST LOAD VALUES LISTED IN POUNDS.
THE POINT OF APPLICATION OF OHL IS CONSIDERED TO BE APPLIED AT THE MIDPOINT OF SHAFT EXTENSION. INPUT OHL APPLIES ONLY TO SHAFT INPUT MODELS.
OHL AND THRUST RATINGS CANNOT BE APPLIED SIMULTANEOUSLY. CONSULT THE FACTORY FOR APPLICATIONS WITH COMBINED OHL AND THRUST LOAD.
AT SPEEDS ABOVE 1750 RPM, UNITS MAY BECOME THERMALLY LIMITED. FOR EXTENDED OPERATION, LIMIT HP TO 1750 RPM RATING.

FOR MOTOR SELECTION
REFER TO SECTION H

RATINGS @ 1750 RPM INPUT 1.00 SERVICE FACTOR

RATIO	OUTPUT SPEED	INPUT H.P.	OUTPUT TORQUE	OUTPUT OHL	INPUT OHL	OUTPUT THRUST
HB2073						
6.51	269	20	4350	2750	385	3370
7.27	241	19	4600	2830	385	3370
8.13	215	17	4720	2950	385	3370
8.77	200	17	4970	2970	385	3370
9.86	177	16	5230	3070	385	3370
11.37	154	17	6700	3100	385	3370
12.70	138	16	7040	3200	385	3370
14.20	123	18	8670	3100	385	3370
15.32	114	17	9030	3200	385	3370
17.21	102	16	9480	3300	385	3370
18.65	94	15	9620	3300	385	3370
21.11	83	14	9930	3300	385	3370
24.06	73	14	11220	3300	385	3370
31.90	55	11	12000	3300	385	3370
34.42	51	10	12100	3300	385	3370
38.68	45	9.3	12200	3300	385	3370
41.90	42	9.7	13700	3300	385	3370
47.45	37	8.5	13700	3300	385	3370
54.07	32	7.5	13700	3300	385	3370
75.95	23	5.3	13700	3300	385	3370
89.80	19	4.5	13700	3300	385	3370
108.25	16	3.7	13700	3300	385	3370
134.10	13	3.0	13700	3300	385	3370
HB2075						
155.99	11.2	2.6	13700	3300	200	3370
191.38	9.1	2.1	13700	3300	200	3370
231.14	7.6	1.8	13700	3300	200	3370
290.33	6.0	1.4	13700	3300	200	3370
350.55	5.0	1.2	13700	3300	200	3370
430.02	4.1	0.94	13700	3300	200	3370
531.87	3.3	0.76	13700	3300	200	3370
652.45	2.7	0.62	13700	3300	200	3370
813.78	2.2	0.50	13700	3300	200	3370
981.05	1.8	0.41	13700	3300	200	3370
1215	1.4	0.33	13700	3300	200	3370
1488	1.2	0.27	13700	3300	200	3370
1778	1.0	0.23	13700	3300	200	3370
2324	0.75	0.17	13700	3300	200	3370
2706	0.65	0.15	13700	3300	200	3370
3352	0.52	0.12	13700	3300	200	3370
HB2083						
6.60	265	34	7500	3100	595	3540
7.37	237	32	8000	3200	595	3540
8.24	212	29	8000	3200	595	3540
8.89	197	27	8200	3300	595	3540
9.99	175	27	9000	3400	595	3540
11.37	154	26	10000	3500	595	3540
12.70	138	33	14200	3400	595	3540
14.20	123	31	15000	3500	595	3540
15.32	114	30	15500	3600	595	3540
17.21	102	27	16000	3700	595	3540
17.91	98	27	16200	3800	595	3540
20.24	86	25	17000	3900	595	3540

ALL TORQUE VALUES LISTED IN INCH-POUNDS, ALL OVERHUNG LOAD AND THRUST LOAD VALUES LISTED IN POUNDS.
THE POINT OF APPLICATION OF OHL IS CONSIDERED TO BE APPLIED AT THE MIDPOINT OF SHAFT EXTENSION. INPUT OHL APPLIES ONLY TO SHAFT INPUT MODELS.
OHL AND THRUST RATINGS CANNOT BE APPLIED SIMULTANEOUSLY. CONSULT THE FACTORY FOR APPLICATIONS WITH COMBINED OHL AND THRUST LOAD.
AT SPEEDS ABOVE 1750 RPM, UNITS MAY BECOME THERMALLY LIMITED. FOR EXTENDED OPERATION, LIMIT HP TO 1750 RPM RATING.

RATINGS @ 1750 RPM INPUT 1.00 SERVICE FACTOR

FOR MOTOR SELECTION
REFER TO SECTION H

RATIO	OUTPUT SPEED	INPUT H.P.	OUTPUT TORQUE	OUTPUT OHL	INPUT OHL	OUTPUT THRUST
HB2083 (continued)						
24.06	73	22	18000	4000	595	3540
31.46	56	19	20500	4500	595	3540
33.94	52	18	21000	4500	595	3540
38.14	46	17	22000	4600	595	3540
39.69	44	17	22500	4700	595	3540
44.86	39	15	23500	4800	595	3540
53.31	33	13	23900	4800	595	3540
74.89	23	9.4	23900	4800	595	3540
88.54	20	8.0	23900	4800	595	3540
106.74	16	6.6	23900	4800	595	3540
132.22	13	5.3	23900	4800	595	3540
HB2085						
161.29	11	4.4	23900	4800	385	3540
202.99	8.6	3.5	23900	4800	385	3540
226.57	7.7	3.1	23900	4800	385	3540
300.73	5.8	2.3	23900	4800	385	3540
357.41	4.9	2.0	23900	4800	385	3540
449.80	3.9	1.57	23900	4800	385	3540
531.79	3.3	1.33	23900	4800	385	3540
641.10	2.7	1.10	23900	4800	385	3540
794.13	2.2	0.89	23900	4800	385	3540
987.16	1.8	0.72	23900	4800	385	3540
1190	1.5	0.59	23900	4800	385	3540
1474	1.2	0.48	23900	4800	385	3540
1868	0.9	0.38	23900	4800	385	3540
2252	0.78	0.31	23900	4800	385	3540
2791	0.63	0.25	23900	4800	385	3540
3363	0.52	0.21	23900	4800	385	3540
HB2093						
7.61	230	53	13600	3750	950	5350
9.48	185	52	16800	3900	950	5350
10.82	162	53	19500	4000	950	5350
12.54	140	53	22500	4250	950	5350
15.63	112	50	26400	4500	950	5350
17.83	98	45	27400	4750	950	5350
22.79	77	37	28300	5000	950	5350
26.55	66	33	30000	5250	950	5350
35.02	50	27	32000	5750	950	5350
39.95	44	28	38000	5950	950	5350
51.07	34	22	38000	6250	950	5350
59.48	29	19	38000	6750	950	5350
76.61	23	15	38000	7550	950	5350
84.07	21	13	38000	8000	950	5350
103.07	17	11	38000	8000	950	5350
115.42	15	9.7	38000	8000	950	5350
130.52	13	8.6	38000	8000	950	5350
HB2095						
159.26	11	7.4	38000	8000	595	5350
198.56	9	5.9	38000	8000	595	5350
243.65	7.2	4.8	38000	8000	595	5350
300.28	5.8	3.9	38000	8000	595	5350
356.87	4.9	3.3	38000	8000	595	5350

ALL TORQUE VALUES LISTED IN INCH-POUNDS, ALL OVERHUNG LOAD AND THRUST LOAD VALUES LISTED IN POUNDS.
THE POINT OF APPLICATION OF OHL IS CONSIDERED TO BE APPLIED AT THE MIDPOINT OF SHAFT EXTENSION. INPUT OHL APPLIES ONLY TO SHAFT INPUT MODELS.
OHL AND THRUST RATINGS CANNOT BE APPLIED SIMULTANEOUSLY. CONSULT THE FACTORY FOR APPLICATIONS WITH COMBINED OHL AND THRUST LOAD.
AT SPEEDS ABOVE 1750 RPM, UNITS MAY BECOME THERMALLY LIMITED. FOR EXTENDED OPERATION, LIMIT HP TO 1750 RPM RATING.

FOR MOTOR SELECTION
REFER TO SECTION H

RATINGS @ 1750 RPM INPUT 1.00 SERVICE FACTOR

RATIO	OUTPUT SPEED	INPUT H.P.	OUTPUT TORQUE	OUTPUT OHL	INPUT OHL	OUTPUT THRUST
HB2095 (continued)						
444.92	3.9	2.6	38000	8000	595	5350
501.29	3.5	2.3	38000	8000	595	5350
624.98	2.8	1.9	38000	8000	595	5350
842.88	2.1	1.4	38000	8000	595	5350
1077.55	1.6	1.1	38000	8000	595	5350
1255	1.4	0.93	38000	8000	595	5350
1513	1.2	0.77	38000	8000	595	5350
1774	1.0	0.66	38000	8000	595	5350
2138	0.82	0.55	38000	8000	595	5350
2622	0.67	0.45	38000	8000	595	5350
3320	0.53	0.35	38000	8000	595	5350
HB2103						
7.13	245	130.5	31500	5550	950	2775
8.14	215	123.4	34000	5600	950	2800
9.33	188	115.6	36500	5650	950	2825
11.36	154	97.8	37600	5750	950	2875
12.97	135	86.8	38100	6000	950	3000
14.86	118	115.5	58100	6850	950	3425
19.06	92	97.2	62700	6350	950	3175
23.10	76	81.5	63700	6900	950	3450
27.26	64	69.0	63700	7400	950	3700
29.07	60	64.7	63700	7700	950	3850
33.30	53	56.5	63700	8100	950	4050
42.73	41	45.0	65100	8200	950	4100
51.77	34	39.7	69500	8600	950	4300
61.11	29	34.2	70800	9500	950	4750
76.82	23	27.2	70800	10200	950	5100
84.94	21	24.6	70800	10900	950	5450
94.53	19	22.1	70800	11300	950	5650
106.05	17	19.7	70800	11900	950	5950
120.12	15	17.4	70800	12500	950	6250
137.71	13	15.2	70800	13000	950	6500
HB2105						
164.81	11	13.3	70800	13000	595	6500
188.77	9.3	11.6	70800	13000	595	6500
242.24	7.2	9.0	70800	13000	595	6500
310.74	5.6	7.0	70800	13000	595	6500
369.30	4.7	5.9	70800	13000	595	6500
456.72	3.8	4.8	70800	13000	595	6500
542.79	3.2	4.0	70800	13000	595	6500
657.70	2.7	3.3	70800	13000	595	6500
776.32	2.3	2.8	70800	13000	595	6500
975.92	1.8	2.2	70800	13000	595	6500
1201	1.5	1.8	70800	13000	595	6500
1516	1.2	1.4	70800	13000	595	6500
1792	0.98	1.2	70800	13000	595	6500
2160	0.81	1.0	70800	13000	595	6500
2697	0.65	0.81	70800	13000	595	6500
3341	0.52	0.65	70800	13000	595	6500

ALL TORQUE VALUES LISTED IN INCH-POUNDS, ALL OVERHUNG LOAD AND THRUST LOAD VALUES LISTED IN POUNDS.
THE POINT OF APPLICATION OF OHL IS CONSIDERED TO BE APPLIED AT THE MIDPOINT OF SHAFT EXTENSION. INPUT OHL APPLIES ONLY TO SHAFT INPUT MODELS.
OHL AND THRUST RATINGS CANNOT BE APPLIED SIMULTANEOUSLY. CONSULT THE FACTORY FOR APPLICATIONS WITH COMBINED OHL AND THRUST LOAD.
AT SPEEDS ABOVE 1750 RPM, UNITS MAY BECOME THERMALLY LIMITED. FOR EXTENDED OPERATION, LIMIT HP TO 1750 RPM RATING.

DIMENSIONS SHOWN ARE FOR REFERENCE ONLY.
CERTIFIED PRINTS ARE AVAILABLE UPON REQUEST.

TRIPLE REDUCTION

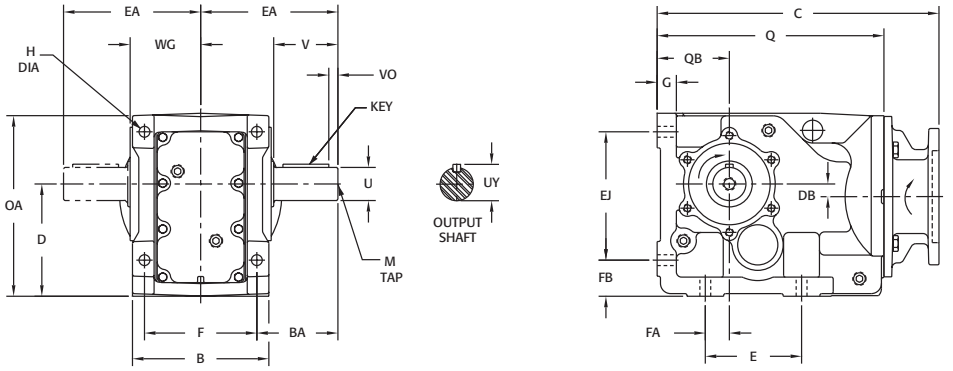

DIMENSIONS ARE INCH / mm

GEARCASE

MODEL	B	BA	D	DB	E	EA	EJ	F	FA	FB	G	H
HB2043E*	5.71	2.95	4.41 +0 -.02	0.47	5.12	5.31	5.12	4.72	1.38	1.46	0.71	0.43
	145	75	112 +0 -.5	12.0	130	135	130	120	35	37	18	11.0
HB2063E*	6.69	3.98	5.51 +0 -.02	0.62	4.72	6.73	6.30	5.51	1.18	1.77	0.94	0.53
	170	101	140 +0 -.5	15.8	120	171	160	140	30	45	24	13.5
HB2073E*	7.87	4.86	7.09 +0 -.02	1.08	5.91	8.11	7.87	6.50	1.57	2.17	1.06	0.69
	200	123.5	180 +0 -.5	27.3	150	206	200	165	40	55	27	17.5
HB2083E*	9.06	5.91	8.35 +0 -.04	1.22	7.09	9.45	9.17	7.09	2.17	2.76	1.26	0.87
	230	150	212 +0 -1	30.9	180	240	233	180	55	70	32	22
HB2093E*	11.42	6.73	10.43 +0 -.04	1.15	9.45	11.46	11.61	9.45	2.95	2.95	1.42	1.02
	290	171	265 +0 -1	29.2	240	291	295	240	75	75	36	26
HB2103E*	13.38	8.34	12.40 +0 -.04	1.65	11.02	13.65	14.17	10.63	3.74	3.74	1.57	1.31
	340	212	315 +0 -1	42	280	347	360	270	95	95	10	33

GEARCASE

MODEL	OA	Q	QB	WG
HB2043E*	7.48	9.82	2.80	2.85
	190	249	71	72.5
HB2063E*	8.98	11.13	3.54	3.46
	228	283	90	87.9
HB2073E*	11.34	13.21	4.41	3.98
	288	335	112	101
HB2083E*	13.54	16.61	5.20	4.57
	344	422	132	116
HB2093E*	16.56	20.29	6.30	5.75
	421	515	160	146
HB2103E*	19.82	23.66	7.87	6.81
	503	601	200	173

OUTPUT SHAFT

U	UY	V	VO	KEY	M
1.250 +0 -.001	1.36	2.36	0.29	1/4 x 1/4 x 1-11/16	1/2-13 x 1.13
-	-	-	-	-	-
1.625 +0 -.001	1.78	3.15	0.45	3/8 x 3/8 x 2-1/4	5/8-11 x 1.38
-	-	-	-	-	-
2.000 +0 -.001	2.21	3.94	0.64	1/2 x 1/2 x 2-5/8	3/4-10 x 1.61
-	-	-	-	-	-
2.375 +0 -.001	2.64	4.72	0.51	5/8 x 5/8 x 3-5/8	3/4-10 x 1.61
-	-	-	-	-	-
2.875 +0 -.001	3.20	5.51	0.67	3/4 x 3/4 x 4-1/8	3/4-10 x 1.81
-	-	-	-	-	-
3.625 +0 -.001	4.00	6.69	0.19	7/8 x 7/8 x 6-5/16	1-8 x 2.13
-	-	-	-	-	-

MOTOR COMPATIBILITY - NEMA

MODEL		NEMA							
		56C	143TC 145TC	182TC 184TC	213TC 215TC	254TC 256TC	284TC 286TC	324TC 326TC	364TC 365TC
HB2043E*	C	12.43	12.43	13.74	-	-	-	-	-
		316	316	349	-	-	-	-	-
HB2063E*	C	13.83	13.83	14.85	-	-	-	-	-
		351	351	377	-	-	-	-	-
HB2073E*	C	16.57	16.57	17.25	17.25	-	-	-	-
		421	421	438	438	-	-	-	-
HB2083E*	C	-	-	22.07	22.07	22.07	22.63	-	-
		-	-	561	561	561	575	-	-
HB2093E*	C	-	-	24.78	24.78	24.78	24.78	-	-
		-	-	629	629	629	629	-	-
HB2103E*	C	-	-	28.15	28.15	28.15	28.15	29.41	29.41
		-	-	715	715	715	715	747	747

*OUTPUT STYLES

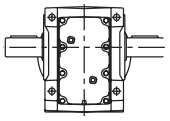
D: Double Ext.

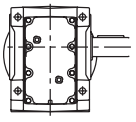
L: Left Ext.

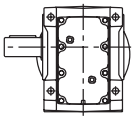
R: Right Ext.

DIMENSIONS SUBJECT TO CHANGE WITHOUT NOTICE

WARNING FOR SAFETY AND TO COMPLY WITH LOCAL AND NATIONAL SAFETY CODES, THE PURCHASER OR USER MUST PROVIDE PROTECTIVE GUARDS OVER ALL SHAFT EXTENSIONS AND DEVICES MOUNTED THEREON.

DIMENSIONS SHOWN ARE FOR REFERENCE ONLY.
CERTIFIED PRINTS ARE AVAILABLE UPON REQUEST.

TRIPLE REDUCTION

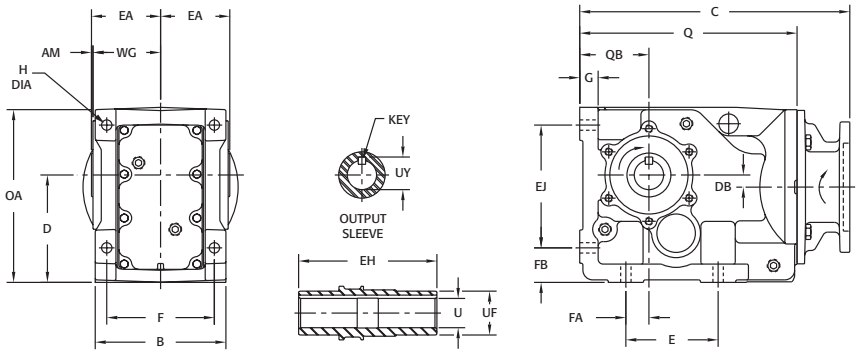

GEARCASE

DIMENSIONS ARE INCH / mm

MODEL	AM	B	D	DB	E	EA	EJ	F	FA	FB	G	H
HB2043ES	0.10	5.71	4.41 +0 -.02	0.47	5.12	2.95	5.12	4.72	1.38	1.46	0.71	0.43
	2.5	145	112 +0 -.5	12.0	130	75	130	120	35	37	18	11.0
HB2063ES	0.08	6.69	5.51 +0 -.02	0.62	4.72	3.54	6.30	5.51	1.18	1.77	0.94	0.53
	2.0	170	140 +0 -.5	15.8	120	90	160	140	30	45	24	13.5
HB2073ES	0.16	7.87	7.09 +0 -.02	1.08	5.91	4.14	7.87	6.50	1.57	2.17	1.06	0.69
	4	200	180 +0 -.5	27.3	150	105	200	165	40	55	27	17.5
HB2083ES	0.16	9.06	8.35 +0 -.04	1.22	7.09	4.73	9.17	7.09	2.17	2.76	1.26	0.87
	4	230	212 +0 -1	30.9	180	120	233	180	55	70	32	22
HB2093ES	0.16	11.42	10.43 +0 -.04	1.15	9.45	5.91	11.61	9.45	2.95	2.95	1.42	1.02
	4	290	265 +0 -1	29.2	240	150	295	240	75	75	36	26
HB2103ES	0.08	13.38	12.40 +0 -.04	1.65	11.02	6.89	14.17	10.63	3.74	3.74	1.57	1.31
	2	340	315 +0 -1	42	280	175	360	270	95	95	10	33

GEARCASE

MODEL	OA	Q	QB	WG
HB2043ES	7.48	9.82	2.80	2.85
	190	249	71	72.5
HB2063ES	8.98	11.13	3.54	3.46
	228	283	90	87.9
HB2073ES	11.34	13.21	4.41	3.98
	288	335	112	101
HB2083ES	13.54	16.61	5.20	4.57
	344	422	132	116
HB2093ES	16.56	20.29	6.30	5.75
	421	515	160	146
HB2103ES	19.82	23.66	7.87	6.81
	503	601	200	173

OUTPUT SLEEVE

EH	U	UF	UY	KEY
5.91	1.375 +.0025 -0	1.97	1.52	(2) 5/16 x 5/16 x 1-3/4
-	-	-	-	-
7.08	1.500 +.0025 -0	2.25	1.67	(2) 3/8 x 3/8 x 2-1/4
-	-	-	-	-
8.27	2.000 +.0025 -0	2.75	2.23	(2) 1/2 x 1/2 x 2-5/8
-	-	-	-	-
9.45	2.375 +.0025 -0	3.34	2.65	(2) 5/8 x 5/8 x 3-5/8
-	-	-	-	-
11.81	2.750 +.0025 -0	3.74	3.04	(2) 5/8 x 5/8 x 3-5/8
-	-	-	-	-
13.78	3.625 +.0025 -0	5.25	4.02	(2) 7/8 x 7/8 x 5-3/8
-	-	-	-	-

MOTOR COMPATIBILITY - NEMA

MODEL		NEMA							
		56C	143TC 145TC	182TC 184TC	213TC 215TC	254TC 256TC	284TC 286TC	324TC 326TC	364TC 365TC
HB2043ES	C	12.43	12.43	13.74	-	-	-	-	-
		316	316	349	-	-	-	-	-
HB2063ES	C	13.83	13.83	14.85	-	-	-	-	-
		351	351	377	-	-	-	-	-
HB2073ES	C	16.57	16.57	17.25	17.25	-	-	-	-
		421	421	438	438	-	-	-	-
HB2083ES	C	-	-	22.07	22.07	22.07	22.63	-	-
		-	-	561	561	561	575	-	-
HB2093ES	C	-	-	24.78	24.78	24.78	24.78	-	-
		-	-	629	629	629	629	-	-
HB2103ES	C	-	-	28.15	28.15	28.15	28.15	29.41	29.41
		-	-	715	715	715	715	747	747

OUTPUT STYLE

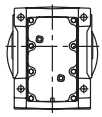

S: Sleeve
(Hollow Bore)

DIMENSIONS SUBJECT TO CHANGE WITHOUT NOTICE

WARNING FOR SAFETY AND TO COMPLY WITH LOCAL AND NATIONAL SAFETY CODES, THE PURCHASER OR USER MUST PROVIDE PROTECTIVE GUARDS OVER ALL SHAFT EXTENSIONS AND DEVICES MOUNTED THEREON.

DIMENSIONS SHOWN ARE FOR REFERENCE ONLY.
CERTIFIED PRINTS ARE AVAILABLE UPON REQUEST.

TRIPLE REDUCTION

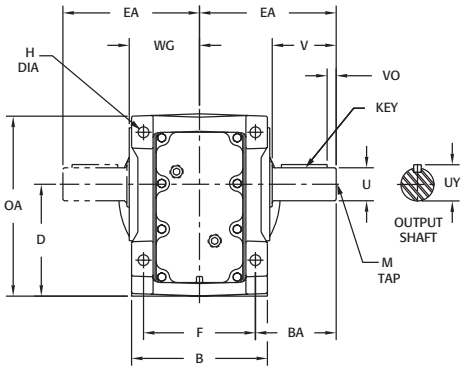

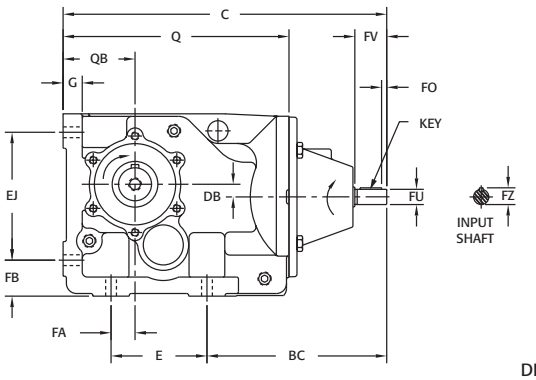

DIMENSIONS ARE INCH / mm

GEARCASE

MODEL	B	BA	D	DB	E	EA	EJ	F	FA	FB	G	H
HB2043A*	5.71	2.95	4.41 +0 -.02	0.47	5.12	5.31	5.12	4.72	1.38	1.46	0.71	0.43
	145	75	112 +0 -.5	12.0	130	135	130	120	35	37	18	11.0
HB2063A*	6.69	3.98	5.51 +0 -.02	0.62	4.72	6.73	6.30	5.51	1.18	1.77	0.94	0.53
	170	101	140 +0 -.5	15.8	120	171	160	140	30	45	24	13.5
HB2073A*	7.87	4.86	7.09 +0 -.02	1.08	5.91	8.11	7.87	6.50	1.57	2.17	1.06	0.69
	200	123.5	180 +0 -.5	27.3	150	206	200	165	40	55	27	17.5
HB2083A*	9.06	5.91	8.35 +0 -.04	1.22	7.09	9.45	9.17	7.09	2.17	2.76	1.26	0.87
	230	150	212 +0 -1	30.9	180	240	233	180	55	70	32	22
HB2093A*	11.42	6.73	10.43 +0 -.04	1.15	9.45	11.46	11.61	9.45	2.95	2.95	1.42	1.02
	290	171	265 +0 -1	29.2	240	291	295	240	75	75	36	26
HB2103A*	13.38	8.34	12.40 +0 -.04	1.65	11.02	13.65	14.17	10.63	3.74	3.74	1.57	1.31
	340	212	315 +0 -1	42	280	347	360	270	95	95	10	33

GEARCASE

MODEL	OA	Q	QB	WG
HB2043A*	7.48	9.82	2.80	2.85
	190	249	71	72.5
HB2063A*	8.98	11.13	3.54	3.46
	228	283	90	87.9
HB2073A*	11.34	13.21	4.41	3.98
	288	335	112	101
HB2083A*	13.54	16.61	5.20	4.57
	344	422	132	116
HB2093A*	16.56	20.29	6.30	5.75
	421	515	160	146
HB2103A*	19.82	23.66	7.87	6.81
	503	601	200	173

OUTPUT SHAFT

U	UY	V	VO	KEY	M
1.250 +0 -.001	1.36	2.36	0.29	1/4 x 1/4 x 1-11/16	1/2-13 x 1.13
-	-	-	-	-	-
1.625 +0 -.001	1.78	3.15	0.45	3/8 x 3/8 x 2-1/4	5/8-11 x 1.38
-	-	-	-	-	-
2.000 +0 -.001	2.21	3.94	0.64	1/2 x 1/2 x 2-5/8	3/4-10 x 1.61
-	-	-	-	-	-
2.375 +0 -.001	2.64	4.72	0.51	5/8 x 5/8 x 3-5/8	3/4-10 x 1.61
-	-	-	-	-	-
2.875 +0 -.001	3.20	5.51	0.67	3/4 x 3/4 x 4-1/8	3/4-10 x 1.81
-	-	-	-	-	-
3.625 +0 -.001	4.00	6.69	0.19	7/8 x 7/8 x 6-5/16	1-8 x 2.13
-	-	-	-	-	-

INPUT SHAFT

MODEL	FU	FZ	FV	FO	KEY
HB2043A*	0.750 +0 -.0005	0.82	1.57	0.25	3/16 x 3/16 x 1-1/16
	-	-	-	-	-
HB2063A*	0.750 +0 -.0005	0.82	1.57	0.25	3/16 x 3/16 x 1-1/16
	-	-	-	-	-
HB2073A*	0.875 +0 -.0005	0.95	1.97	0.28	3/16 x 3/16 x 1-1/4
	-	-	-	-	-
HB2083A*	1.125 +0 -.001	1.23	2.36	0.32	1/4 x 1/4 x 1-11/16
	-	-	-	-	-
HB2093A*	1.375 +0 -.001	1.51	3.15	0.35	5/16 x 5/16 x 2-3/8
	-	-	-	-	-
HB2103A*	1.875 +0 -.001	2.08	3.75	NA	1/2 x 1/2 x 3-1/4
	-	-	-	-	-

INPUT/GEARCASE

BC	C
7.62	14.16
194	360
8.85	15.94
225	405
10.66	19.40
271	493
14.29	24.40
363	620
15.82	28.62
402	727
17.44	32.59
443	828

*OUTPUT STYLES

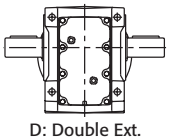

D: Double Ext.

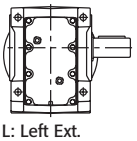

L: Left Ext.

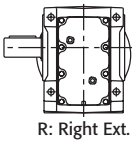

R: Right Ext.

DIMENSIONS SUBJECT TO CHANGE WITHOUT NOTICE

WARNING FOR SAFETY AND TO COMPLY WITH LOCAL AND NATIONAL SAFETY CODES, THE PURCHASER OR USER MUST PROVIDE PROTECTIVE GUARDS OVER ALL SHAFT EXTENSIONS AND DEVICES MOUNTED THEREON.

DIMENSIONS SHOWN ARE FOR REFERENCE ONLY.
CERTIFIED PRINTS ARE AVAILABLE UPON REQUEST.

TRIPLE REDUCTION

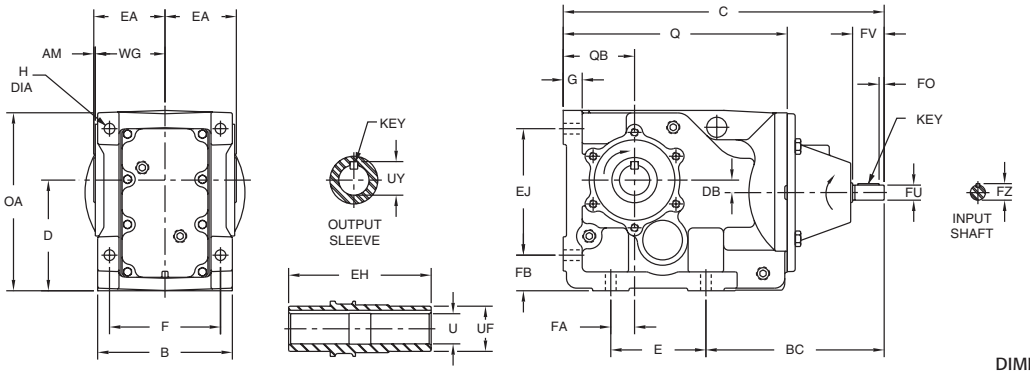

DIMENSIONS ARE INCH / mm

GEARCASE

MODEL	AM	B	D	DB	E	EA	EJ	F	FA	FB	G	H
HB2043AS	0.10	5.71	4.41 +0 -.02	0.47	5.12	2.95	5.12	4.72	1.38	1.46	0.71	0.43
	2.5	145	112 +0 -.5	12.0	130	75	130	120	35	37	18	11.0
HB2063AS	0.08	6.69	5.51 +0 -.02	0.62	4.72	3.54	6.30	5.51	1.18	1.77	0.94	0.53
	2.0	170	140 +0 -.5	15.8	120	90	160	140	30	45	24	13.5
HB2073AS	0.16	7.87	7.09 +0 -.02	1.08	5.91	4.14	7.87	6.50	1.57	2.17	1.06	0.69
	4	200	180 +0 -.5	27.3	150	105	200	165	40	55	27	17.5
HB2083AS	0.16	9.06	8.35 +0 -.04	1.22	7.09	4.73	9.17	7.09	2.17	2.76	1.26	0.87
	4	230	212 +0 -1	30.9	180	120	233	180	55	70	32	22
HB2093AS	0.16	11.42	10.43 +0 -.04	1.15	9.45	5.91	11.61	9.45	2.95	2.95	1.42	1.02
	4	290	265 +0 -1	29.2	240	150	295	240	75	75	36	26
HB2103AS	0.08	13.38	12.40 +0 -.04	1.65	11.02	6.89	14.17	10.63	3.74	3.74	1.57	1.31
	2	340	315 +0 -1	42	280	175	360	270	95	95	10	33

GEARCASE

MODEL	OA	Q	QB	WG
HB2043AS	7.48	9.82	2.80	2.85
	190	249	71	72.5
HB2063AS	8.98	11.13	3.54	3.46
	228	283	90	87.9
HB2073AS	11.34	13.21	4.41	3.98
	288	335	112	101
HB2083AS	13.54	16.61	5.20	4.57
	344	422	132	116
HB2093AS	16.56	20.29	6.30	5.75
	421	515	160	146
HB2103AS	19.82	23.66	7.87	6.81
	503	601	200	173

OUTPUT SLEEVE

EH	U	UF	UY	KEY
5.91	1.375 +.0025 -0	1.97	1.52	(2) 5/16 x 5/16 x 1-3/4
-	-	-	-	-
7.08	1.500 +.0025 -0	2.25	1.67	(2) 3/8 x 3/8 x 2-1/4
-	-	-	-	-
8.27	2.000 +.0025 -0	2.75	2.23	(2) 1/2 x 1/2 x 2-5/8
-	-	-	-	-
9.45	2.375 +.0025 -0	3.34	2.65	(2) 5/8 x 5/8 x 3-5/8
-	-	-	-	-
11.81	2.750 +.0025 -0	3.74	3.04	(2) 5/8 x 5/8 x 3-5/8
-	-	-	-	-
13.78	3.625 +.0025 -0	5.25	4.02	(2) 7/8 x 7/8 x 5-3/8
-	-	-	-	-

INPUT SHAFT

MODEL	FU	FZ	FV	FO	KEY
HB2043AS	0.750 +0 -.0005	0.82	1.57	0.25	3/16 x 3/16 x 1-1/16
	-	-	-	-	-
HB2063AS	0.750 +0 -.0005	0.82	1.57	0.25	3/16 x 3/16 x 1-1/16
	-	-	-	-	-
HB2073AS	0.875 +0 -.0005	0.95	1.97	0.28	3/16 x 3/16 x 1-1/4
	-	-	-	-	-
HB2083AS	1.125 +0 -.001	1.23	2.36	0.32	1/4 x 1/4 x 1-11/16
	-	-	-	-	-
HB2093AS	1.375 +0 -.001	1.51	3.15	0.35	5/16 x 5/16 x 2-3/8
	▪	▪	▪	▪	▪
HB2103AS	1.875 +0 -.001	2.08	3.75	NA	1/2 x 1/2 x 3-1/4
	-	-	-	-	-

INPUT/GEARCASE

BC	C
7.62	14.16
194	360
8.85	15.94
225	405
10.66	19.40
271	493
14.29	24.40
363	620
15.82	28.62
402	727
17.44	32.59
443	828

OUTPUT STYLE

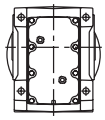

S: Sleeve
(Hollow Bore)

DIMENSIONS SUBJECT TO CHANGE WITHOUT NOTICE

WARNING FOR SAFETY AND TO COMPLY WITH LOCAL AND NATIONAL SAFETY CODES, THE PURCHASER OR USER MUST PROVIDE PROTECTIVE GUARDS OVER ALL SHAFT EXTENSIONS AND DEVICES MOUNTED THEREON.

DIMENSIONS SHOWN ARE FOR REFERENCE ONLY.
CERTIFIED PRINTS ARE AVAILABLE UPON REQUEST.

QUIN REDUCTION

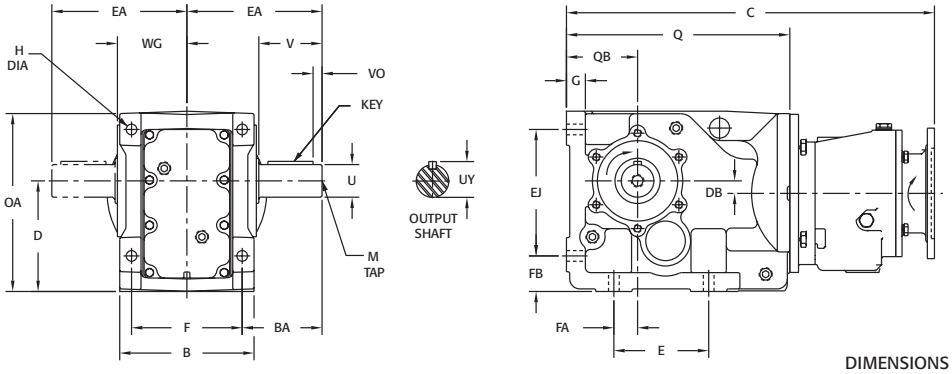

DIMENSIONS ARE INCH / mm

GEARCASE

MODEL	B	BA	D	DB	E	EA	EJ	F	FA	FB	G	H
HB2065E*	6.69	3.98	5.51 +0 -.02	0.62	4.72	6.73	6.30	5.51	1.18	1.77	0.94	0.53
	170	101	140 +0 -.5	15.8	120	171	160	140	30	45	24	13.5
HB2075E*	7.87	4.86	7.09 +0 -.02	1.08	5.91	8.11	7.87	6.50	1.57	2.17	1.06	0.69
	200	123.5	180 +0 -.5	27.3	150	206	200	165	40	55	27	17.5
HB2085E*	9.06	5.91	8.35 +0 -.04	1.22	7.09	9.45	9.17	7.09	2.17	2.76	1.26	0.87
	230	150	212 +0 -1	30.9	180	240	233	180	55	70	32	22
HB2095E*	11.42	6.73	10.43 +0 -.04	1.15	9.45	11.46	11.61	9.45	2.95	2.95	1.42	1.02
	290	171	265 +0 -1	29.2	240	291	295	240	75	75	36	26
HB2105E*	13.38	8.34	12.40 +0 -.04	1.65	11.02	13.65	14.17	10.63	3.74	3.74	1.57	1.31
	340	212	315 +0 -1	42	280	347	360	270	95	95	10	33

GEARCASE

MODEL	OA	Q	QB	WG
HB2065E*	8.98	11.13	3.54	3.46
	228	283	90	87.9
HB2075E*	11.34	13.21	4.41	3.98
	288	335	112	101
HB2085E*	13.54	16.61	5.20	4.57
	344	422	132	116
HB2095E*	16.56	20.29	6.30	5.75
	421	515	160	146
HB2105E*	19.82	23.66	7.87	6.81
	503	601	200	173

OUTPUT SHAFT

U	UY	V	VO	KEY	M
1.625 +0 -.001	1.78	3.15	0.45	3/8 x 3/8 x 2-1/4	5/8-11 x 1.38
-	-	-	-	-	-
2.000 +0 -.001	2.21	3.94	0.64	1/2 x 1/2 x 2-5/8	3/4-10 x 1.61
-	-	-	-	-	-
2.375 +0 -.001	2.64	4.72	0.51	5/8 x 5/8 x 3-5/8	3/4-10 x 1.61
-	-	-	-	-	-
2.875 +0 -.001	3.20	5.51	0.67	3/4 x 3/4 x 4-1/8	3/4-10 x 1.81
-	-	-	-	-	-
3.625 +0 -.001	4.00	6.69	0.19	7/8 x 7/8 x 6-5/16	1-8 x 2.13
-	-	-	-	-	-

MOTOR COMPATIBILITY - NEMA

MODEL		NEMA 56C	NEMA 143TC 145TC	NEMA 182TC 184TC
HB2065E*	C	19.06	19.06	-
		484	484	-
HB2075E*	C	21.55	21.55	22.57
		547	547	573
HB2085E*	C	27.61	27.61	28.29
		701	701	719
HB2095E*	C	-	-	34.81
		-	-	881
HB2105E*	C	-	-	38.18
		-	-	970

DIMENSIONS SUBJECT TO CHANGE WITHOUT NOTICE

*OUTPUT STYLES

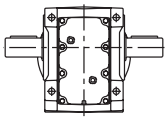

D: Double Ext.

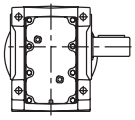

L: Left Ext.

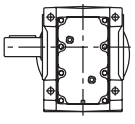

R: Right Ext.

WARNING FOR SAFETY AND TO COMPLY WITH LOCAL AND NATIONAL SAFETY CODES, THE PURCHASER OR USER MUST PROVIDE PROTECTIVE GUARDS OVER ALL SHAFT EXTENSIONS AND DEVICES MOUNTED THEREON.

DIMENSIONS SHOWN ARE FOR REFERENCE ONLY.
CERTIFIED PRINTS ARE AVAILABLE UPON REQUEST.

QUIN REDUCTION

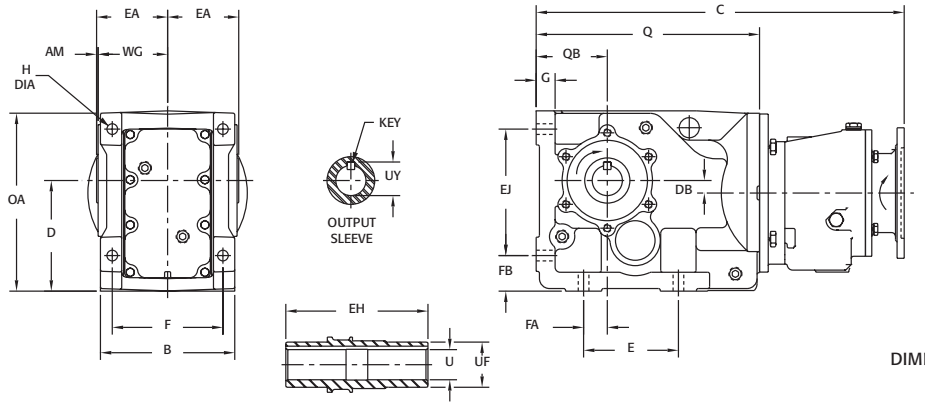

DIMENSIONS ARE INCH / mm

GEARCASE

MODEL	AM	B	D	DB	E	EA	EJ	F	FA	FB	G	H
HB2065ES	0.08	6.69	5.51 +0 -.02	0.62	4.72	3.54	6.30	5.51	1.18	1.77	0.94	0.53
	2.0	170	140 +0 -.5	15.8	120	90	160	140	30	45	24	13.5
HB2075ES	0.16	7.87	7.09 +0 -.02	1.08	5.91	4.14	7.87	6.50	1.57	2.17	1.06	0.69
	4	200	180 +0 -.5	27.3	150	105	200	165	40	55	27	17.5
HB2085ES	0.16	9.06	8.35 +0 -.04	1.22	7.09	4.73	9.17	7.09	2.17	2.76	1.26	0.87
	4	230	212 +0 -1	30.9	180	120	233	180	55	70	32	22
HB2095ES	0.16	11.42	10.43 +0 -.04	1.15	9.45	5.91	11.61	9.45	2.95	2.95	1.42	1.02
	4	290	265 +0 -1	29.2	240	150	295	240	75	75	36	26
HB2105ES	0.08	13.38	12.40 +0 -.04	1.65	11.02	6.89	14.17	10.63	3.74	3.74	1.57	1.31
	2	340	315 +0 -1	42	280	175	360	270	95	95	10	33

GEARCASE

MODEL	OA	Q	QB	WG
HB2065ES	8.98	11.13	3.54	3.46
	228	283	90	87.9
HB2075ES	11.34	13.21	4.41	3.98
	288	335	112	101
HB2085ES	13.54	16.61	5.20	4.57
	344	422	132	116
HB2095ES	16.56	20.29	6.30	5.75
	421	515	160	146
HB2105ES	19.82	23.66	7.87	6.81
	503	601	200	173

OUTPUT SLEEVE

EH	U	UF	UY	KEY
7.08	1.500 +.0025 -0	2.25	1.67	(2) 3/8 x 3/8 x 2-1/4
-	-	-	-	-
8.27	2.000 +.0025 -0	2.75	2.23	(2) 1/2 x 1/2 x 2-5/8
-	-	-	-	-
9.45	2.375 +.0025 -0	3.34	2.65	(2) 5/8 x 5/8 x 3-5/8
-	-	-	-	-
11.81	2.750 +.0025 -0	3.74	3.04	(2) 5/8 x 5/8 x 3-5/8
-	-	-	-	-
13.78	3.625 +.0025 -0	5.25	4.02	(2) 7/8 x 7/8 x 5-3/8
-	-	-	-	-

MOTOR COMPATIBILITY - NEMA

MODEL		NEMA 56C	NEMA 143TC 145TC	NEMA 182TC 184TC
HB2065ES	C	19.06	19.06	-
		484	484	-
HB2075ES	C	21.55	21.55	22.57
		547	547	573
HB2085ES	C	27.61	27.61	28.29
		701	701	719
HB2095ES	C	-	-	34.81
		-	-	881
HB2105ES	C	-	-	38.18
		-	-	970

DIMENSIONS SUBJECT TO CHANGE WITHOUT NOTICE

OUTPUT STYLE

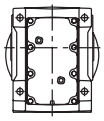

S: Sleeve
(Hollow Bore)

WARNING FOR SAFETY AND TO COMPLY WITH LOCAL AND NATIONAL SAFETY CODES, THE PURCHASER OR USER MUST PROVIDE PROTECTIVE GUARDS OVER ALL SHAFT EXTENSIONS AND DEVICES MOUNTED THEREON.

DIMENSIONS SHOWN ARE FOR REFERENCE ONLY.
CERTIFIED PRINTS ARE AVAILABLE UPON REQUEST.

QUIN REDUCTION

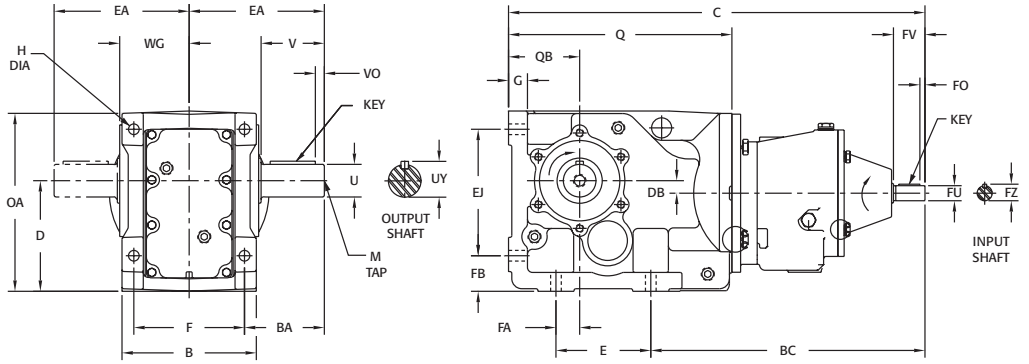

GEARCASE

DIMENSIONS ARE INCH / mm

MODEL	B	BA	D	DB	E	EA	EJ	F	FA	FB	G	H
HB2065A*	6.69	3.98	5.51 +0 -.02	0.62	4.72	6.73	6.30	5.51	1.18	1.77	0.94	0.53
	170	101	140 +0 -.5	15.8	120	171	160	140	30	45	24	13.5
HB2075A*	7.87	4.86	7.09 +0 -.02	1.08	5.91	8.11	7.87	6.50	1.57	2.17	1.06	0.69
	200	123.5	180 +0 -.5	27.3	150	206	200	165	40	55	27	17.5
HB2085A*	9.06	5.91	8.35 +0 -.04	1.22	7.09	9.45	9.17	7.09	2.17	2.76	1.26	0.87
	230	150	212 +0 -1	30.9	180	240	233	180	55	70	32	22
HB2095A*	11.42	6.73	10.43 +0 -.04	1.15	9.45	11.46	11.61	9.45	2.95	2.95	1.42	1.02
	290	171	265 +0 -1	29.2	240	291	295	240	75	75	36	26
HB2105A*	13.38	8.34	12.40 +0 -.04	1.65	11.02	13.65	14.17	10.63	3.74	3.74	1.57	1.31
	340	212	315 +0 -1	42	280	347	360	270	95	95	10	33

GEARCASE

MODEL	OA	Q	QB	WG
HB2065A*	8.98	11.13	3.54	3.46
	228	283	90	87.9
HB2075A*	11.34	13.21	4.41	3.98
	288	335	112	101
HB2085A*	13.54	16.61	5.20	4.57
	344	422	132	116
HB2095A*	16.56	20.29	6.30	5.75
	421	515	160	146
HB2105A*	19.82	23.66	7.87	6.81
	503	601	200	173

OUTPUT SHAFT

U	UY	V	VO	KEY	M
1.625 +0 -.001	1.78	3.15	0.45	3/8 x 3/8 x 2-1/4	5/8-11 x 1.38
-	-	-	-	-	-
2.000 +0 -.001	2.21	3.94	0.64	1/2 x 1/2 x 2-5/8	3/4-10 x 1.61
-	-	-	-	-	-
2.375 +0 -.001	2.64	4.72	0.51	5/8 x 5/8 x 3-5/8	3/4-10 x 1.61
-	-	-	-	-	-
2.875 +0 -.001	3.20	5.51	0.67	3/4 x 3/4 x 4-1/8	3/4-10 x 1.81
-	-	-	-	-	-
3.625 +0 -.001	4.00	6.69	0.19	7/8 x 7/8 x 6-5/16	1-8 x 2.13
-	-	-	-	-	-

INPUT SHAFT

MODEL	FU	FZ	FV	FO	KEY
HB2065A*	0.625 +0 -.0005	N/A	1.88	N/A	3/16 x 3/16 x 1-1/16
	-	-	-	-	-
HB2075A*	0.750 +0 -.0005	0.82	1.57	0.25	3/16 x 3/16 x 1-1/16
	-	-	-	-	-
HB2085A*	0.875 +0 -.0005	0.95	1.97	0.28	3/16 x 3/16 x 1-1/4
	-	-	-	-	-
HB2095A*	1.375 +0 -.001	1.51	3.15	0.35	5/16 x 5/16 x 2-3/8
	-	-	-	-	-
HB2105A*	1.375 +0 -.001	1.51	3.15	0.35	5/16 x 5/16 x 2-3/8
	-	-	-	-	-

INPUT/ GEARCASE

BC	C
14.01	21.10
356	536
14.92	23.66
379	601
20.33	30.45
516	773
25.13	37.93
638	963
26.15	41.30
664	1050

*OUTPUT STYLES

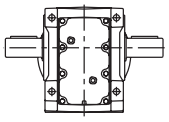

D: Double Ext.

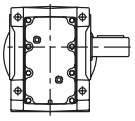

L: Left Ext.

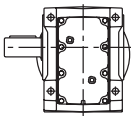

R: Right Ext.

DIMENSIONS SUBJECT TO CHANGE WITHOUT NOTICE

WARNING FOR SAFETY AND TO COMPLY WITH LOCAL AND NATIONAL SAFETY CODES, THE PURCHASER OR USER MUST PROVIDE PROTECTIVE GUARDS OVER ALL SHAFT EXTENSIONS AND DEVICES MOUNTED THEREON.

DIMENSIONS SHOWN ARE FOR REFERENCE ONLY.
CERTIFIED PRINTS ARE AVAILABLE UPON REQUEST.

QUIN REDUCTION

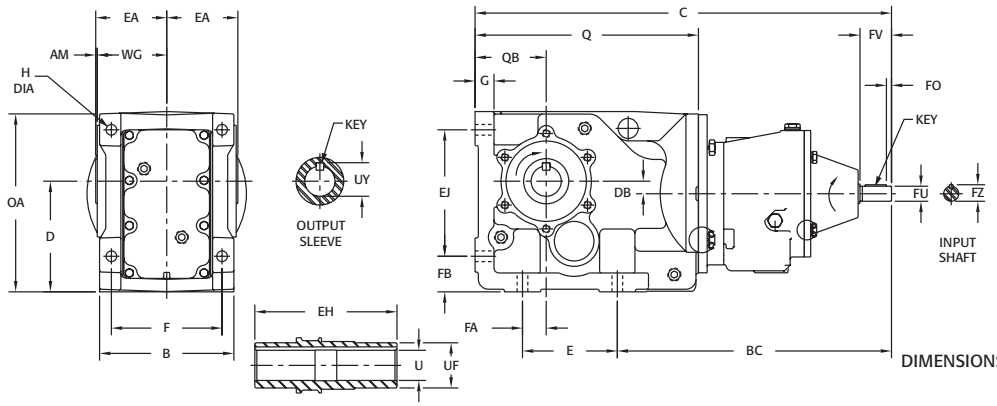

DIMENSIONS ARE INCH / mm

GEARCASE

MODEL	AM	B	D	DB	E	EA	EJ	F	FA	FB	G	H
HB2065AS	0.08	6.69	5.51 +0 -.02	0.62	4.72	3.54	6.30	5.51	1.18	1.77	0.94	0.53
	2.0	170	140 +0 -.5	15.8	120	90	160	140	30	45	24	13.5
HB2075AS	0.16	7.87	7.09 +0 -.02	1.08	5.91	4.14	7.87	6.50	1.57	2.17	1.06	0.69
	4	200	180 +0 -.5	27.3	150	105	200	165	40	55	27	17.5
HB2085AS	0.16	9.06	8.35 +0 -.04	1.22	7.09	4.73	9.17	7.09	2.17	2.76	1.26	0.87
	4	230	212 +0 -1	30.9	180	120	233	180	55	70	32	22
HB2095AS	0.16	11.42	10.43 +0 -.04	1.15	9.45	5.91	11.61	9.45	2.95	2.95	1.42	1.02
	4	290	265 +0 -1	29.2	240	150	295	240	75	75	36	26
HB2105AS	0.08	13.38	12.40 +0 -.04	1.65	11.02	6.89	14.17	10.63	3.74	3.74	1.57	1.31
	2	340	315 +0 -1	42	280	175	360	270	95	95	10	33

GEARCASE

MODEL	OA	Q	QB	WG
HB2065AS	8.98	11.13	3.54	3.46
	228	283	90	87.9
HB2075AS	11.34	13.21	4.41	3.98
	288	335	112	101
HB2085AS	13.54	16.61	5.20	4.57
	344	422	132	116
HB2095AS	16.56	20.29	6.30	5.75
	421	515	160	146
HB2105AS	19.82	23.66	7.87	6.81
	503	601	200	173

OUTPUT SLEEVE

EH	U	UF	UY	KEY
7.08	1.500 +.0025 -0	2.25	1.67	(2) 3/8 x 3/8 x 2-1/4
-	-	-	-	-
8.27	2.000 +.0025 -0	2.75	2.23	(2) 1/2 x 1/2 x 2-5/8
-	-	-	-	-
9.45	2.375 +.0025 -0	3.34	2.65	(2) 5/8 x 5/8 x 3-5/8
-	-	-	-	-
11.81	2.750 +.0025 -0	3.74	3.04	(2) 5/8 x 5/8 x 3-5/8
-	-	-	-	-
13.78	3.625 +.0025 -0	5.25	4.02	(2) 7/8 x 7/8 x 5-3/8
-	-	-	-	-

INPUT SHAFT

MODEL	FU	FZ	FV	FO	KEY
HB2065AS	0.625 +0 -.0005	N/A	1.88	N/A	3/16 x 3/16 x 1-1/16
	-	-	-	-	-
HB2075AS	0.750 +0 -.0005	0.82	1.57	0.25	3/16 x 3/16 x 1-1/16
	-	-	-	-	-
HB2085AS	0.875 +0 -.0005	0.95	1.97	0.28	3/16 x 3/16 x 1-1/4
	-	-	-	-	-
HB2095AS	1.375 +0 -.001	1.51	3.15	0.35	5/16 x 5/16 x 2-3/8
	-	-	-	-	-
HB2105AS	1.375 +0 -.001	1.51	3.15	0.35	5/16 x 5/16 x 2-3/8
	-	-	-	-	-

INPUT/ GEARCASE

BC	C
14.01	21.10
356	536
14.92	23.66
379	601
20.33	30.45
516	773
25.13	37.93
638	963
26.15	41.30
664	1050

OUTPUT STYLE

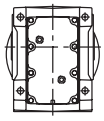

S: Sleeve
(Hollow Bore)

DIMENSIONS SUBJECT TO CHANGE WITHOUT NOTICE

WARNING FOR SAFETY AND TO COMPLY WITH LOCAL AND NATIONAL SAFETY CODES, THE PURCHASER OR USER MUST PROVIDE PROTECTIVE GUARDS OVER ALL SHAFT EXTENSIONS AND DEVICES MOUNTED THEREON.

DIMENSIONS SHOWN ARE FOR REFERENCE ONLY.
CERTIFIED PRINTS ARE AVAILABLE UPON REQUEST.

ACCESSORIES

FLANGE MOUNT KIT (SHOWN WITH OUTPUT SHAFT)

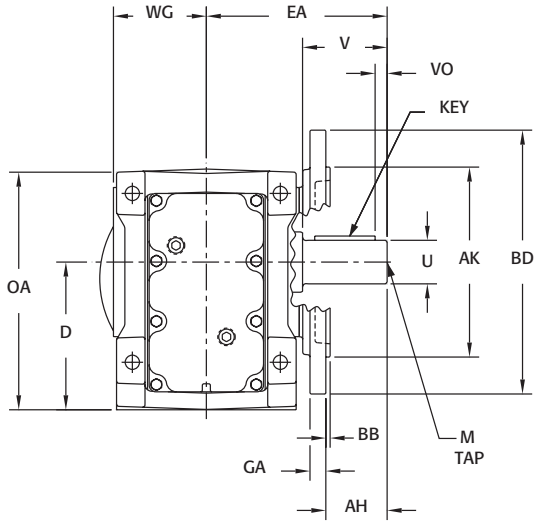

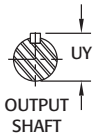

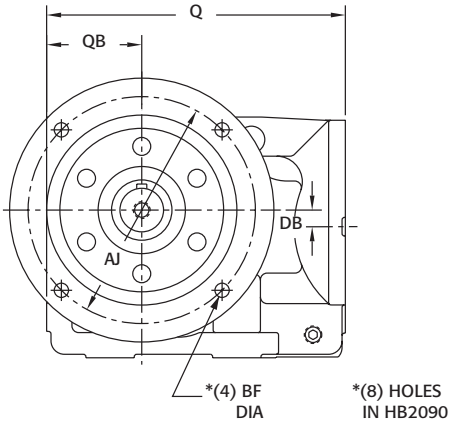

DIMENSIONS ARE INCH / mm

GEARCASE

SERIES	D	DB	EA	OA	Q	QB	WG
HB2040	4.41	0.47	5.31	7.48	9.82	2.80	2.85
	112	12.0	135	190	249	71	72.5
HB2060	5.51	0.62	6.73	8.98	11.13	3.54	3.46
	140	15.8	171	228	283	90	87.9
HB2070	7.09	1.08	8.11	11.34	13.21	4.41	3.98
	180	27.3	206	288	335	112	101
HB2080	8.35	1.22	9.45	13.54	16.61	5.20	4.57
	212	30.9	240	344	422	132	116
HB2090	10.43	1.15	11.46	16.56	20.29	6.30	5.75
	265	29.2	291	421	515	160	146
HB2100	12.40	1.65	13.65	19.82	23.66	7.87	6.81
	315	42	347	503	601	200	173

OUTPUT SHAFT

U	UY	V	VO	KEY	M
$1.250^{+0}_{-.001}$	1.36	2.36	0.29	1/4 x 1/4 x 1-11/16	1/2-13 x 1.13
-	-	-	-	-	-
$1.625^{+0}_{-.001}$	1.78	3.15	0.45	3/8 x 3/8 x 2-1/4	5/8-11 x 1.38
-	-	-	-	-	-
$2.000^{+0}_{-.001}$	2.21	3.94	0.64	1/2 x 1/2 x 2-5/8	3/4-10 x 1.61
-	-	-	-	-	-
$2.375^{+0}_{-.001}$	2.64	4.72	0.51	5/8 x 5/8 x 3-5/8	3/4-10 x 1.61
-	-	-	-	-	-
$2.875^{+0}_{-.001}$	3.20	5.51	0.67	3/4 x 3/4 x 4-1/8	3/4-10 x 1.61
-	-	-	-	-	-
$3.625^{+0}_{-.001}$	4.00	6.69	0.19	7/8 x 7/8 x 6-5/16	1-8 x 2.13
-	-	-	-	-	-

FLANGE

SERIES	AH	AJ	AK	BB	BD	BF	GA
HB2040	1.38	6.50	$5.118^{+0}_{-.002}$	0.14	7.87	0.43	0.47
	35	165	$130^{-.003}_{-.054}$	3.5	200	11	12
HB2060	2.28	8.46	$7.087^{+0}_{-.002}$	0.16	9.84	0.53	0.59
	58	215	$180^{+.010}_{-.041}$	4	250	13.5	15
HB2070	2.52	10.43	$9.055^{+0}_{-.002}$	0.16	11.81	0.53	0.63
	64	265	$230^{-.003}_{-.054}$	4	300	13.5	16
HB2080	3.55	11.81	$9.843^{+0}_{-.002}$	0.20	13.78	0.69	0.71
	90	300	$250^{+0}_{-.051}$	5	350	17.5	18
HB2090	3.92	15.75	$13.78^{+0}_{-.002}$	0.20	17.72	0.69	0.87
	99	400	$350^{+0}_{-.051}$	5	450	17.5	22
HB2100	3.73	15.75	$13.78^{+0}_{-.002}$	0.20	17.72	0.69	0.87
	95	400	$350^{+0}_{-.051}$	5	450	17.5	22

FLANGE MOUNT KIT

SERIES	KIT NUMBER	WT. LBS.
HB2040	0259-00010	11
HB2060	0259-00005	15
HB2070	0259-00006	18
HB2080	0259-00007	25
HB2090	0259-00008	45
HB2100	Factory Assembled	

FLANGE MOUNT KITS ARE DESIGNED TO BE INSTALLED BY THE CUSTOMER.

CONSULT FACTORY IF FLANGE MOUNT KIT IS GOING TO BE INSTALLED ON NON-SHAFT EXTENSION SIDE.

DIMENSIONS SUBJECT TO CHANGE WITHOUT NOTICE

IF FLANGE MOUNT KIT IS TO BE FACTORY ASSEMBLED TO UNIT A MOUNTING LOCATION MUST BE SPECIFIED AS SHOWN:

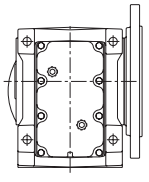
FL

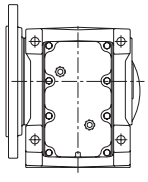
FR

WARNING FOR SAFETY AND TO COMPLY WITH LOCAL AND NATIONAL SAFETY CODES, THE PURCHASER OR USER MUST PROVIDE PROTECTIVE GUARDS OVER ALL SHAFT EXTENSIONS AND DEVICES MOUNTED THEREON.

DIMENSIONS SHOWN ARE FOR REFERENCE ONLY.
CERTIFIED PRINTS ARE AVAILABLE UPON REQUEST.

ACCESSORIES

FLANGE MOUNT KIT (SHOWN WITH OUTPUT SLEEVE)

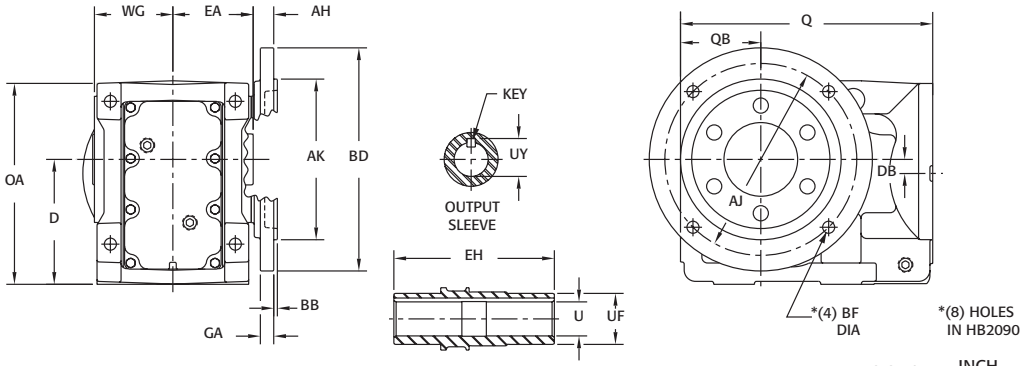

DIMENSIONS ARE INCH / mm

GEARCASE

SERIES	D	DB	EA	OA	Q	QB	WG
HB2040	4.41	0.47	2.95	7.48	9.82	2.80	2.85
	112	12.0	75	190	249	71	72.5
HB2060	5.51	0.62	3.54	8.98	11.13	3.54	3.46
	140	15.8	90	228	283	90	87.9
HB2070	7.09	1.08	4.14	11.34	13.21	4.41	3.98
	180	27.3	105	288	335	112	101
HB2080	8.35	1.22	4.73	13.54	16.61	5.20	4.57
	212	30.9	120	344	422	132	116
HB2090	10.43	1.15	5.91	16.56	20.29	6.30	5.75
	265	29.2	150	421	515	160	146
HB2100	12.40	1.65	6.89	19.82	23.66	7.87	6.81
	315	42	175	503	601	200	173

OUTPUT SLEEVE

EH	U	UF	UY	KEY
5.91	1.375 $^{+.0025}_{-0}$	1.97	1.52	(2) 5/16 x 5/16 x 1-3/4
-	-	-	-	-
7.08	1.500 $^{+.0025}_{-0}$	2.25	1.67	(2) 3/8 x 3/8 x 2-1/4
-	-	-	-	-
8.27	2.000 $^{+.0025}_{-0}$	2.75	2.23	(2) 1/2 x 1/2 x 2-5/8
-	-	-	-	-
9.45	2.375 $^{+.0025}_{-0}$	3.34	2.65	(2) 5/8 x 5/8 x 3-5/8
-	-	-	-	-
11.81	2.750 $^{+.0025}_{-0}$	3.74	3.04	(2) 5/8 x 5/8 x 3-5/8
-	-	-	-	-
13.78	3.625 $^{+.0025}_{-0}$	5.25	4.02	(2) 7/8 x 7/8 x 5-3/8
-	-	-	-	-

FLANGE

SERIES	AH	AJ	AK	BB	BD	BF	GA
HB2040	0.98	6.50	5.118 $^{+0}_{-.002}$	0.14	7.87	0.43	0.47
	25	165	130 $^{-.003}_{-.054}$	3.5	200	11	12
HB2060	0.91	8.46	7.087 $^{+0}_{-.002}$	0.16	9.84	0.53	0.59
	23	215	180 $^{+.010}_{-.041}$	4	250	13.5	15
HB2070	1.46	10.43	9.055 $^{+0}_{-.002}$	0.16	11.81	0.53	0.63
	37	265	230 $^{-.003}_{-.054}$	4	300	13.5	16
HB2080	1.18	11.81	9.843 $^{+0}_{-.002}$	0.20	13.78	0.69	0.71
	30	300	250 $^{+0}_{-.051}$	5	350	17.5	18
HB2090	1.63	15.75	13.78 $^{+0}_{-.002}$	0.20	17.72	0.69	0.87
	41	400	350 $^{+0}_{-.051}$	5	450	17.5	22
HB2100	2.963	15.75	13.78 $^{+0}_{-.002}$	0.20	17.72	0.69	0.87
	75.26	400	350 $^{+0}_{-.051}$	5	450	17.5	22

FLANGE MOUNT KIT

SERIES	KIT NUMBER	WT. LBS.
HB2040	0259-00010	11
HB2060	0259-00005	15
HB2070	0259-00006	18
HB2080	0259-00007	25
HB2090	0259-00008	45
HB2100	Factory Assembled	

FLANGE MOUNT KITS ARE DESIGNED TO BE INSTALLED BY THE CUSTOMER.

IF FLANGE MOUNT KIT IS TO BE FACTORY ASSEMBLED TO UNIT A MOUNTING LOCATION MUST BE SPECIFIED AS SHOWN ON P.K-38.

TORQUE ARM KIT

SERIES	KIT NUMBER	A	B	C	D	E	F	G	WT. LBS.
HB2040	0259-00009	1.25	12.50 MIN. 18.38 MAX.	2.36	4.72	0.50	1.25	0.43	4
HB2060	0259-00001	1.25	12.50 MIN. 18.38 MAX.	2.76	5.51	0.50	1.25	0.53	6
HB2070	0259-00002	2.00	14.88 MIN. 20.88 MAX.	3.25	6.50	0.75	2.00	0.69	6
HB2080	0259-00003	2.00	17.69 MIN. 23.69 MAX.	3.54	7.09	0.75	2.00	0.87	12
HB2090	0259-00004	2.00	17.69 MIN. 23.69 MAX.	4.73	9.45	0.75	2.00	1.02	15

DIMENSIONS SUBJECT TO CHANGE WITHOUT NOTICE

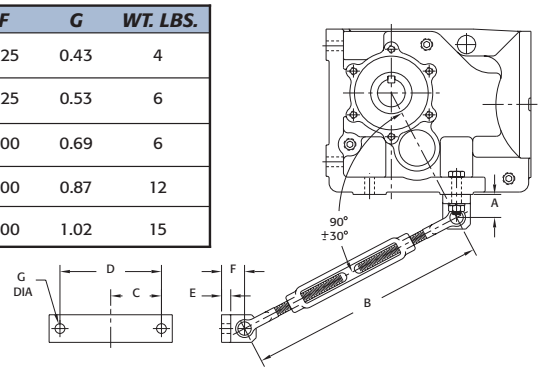

WARNING FOR SAFETY AND TO COMPLY WITH LOCAL AND NATIONAL SAFETY CODES, THE PURCHASER OR USER MUST PROVIDE PROTECTIVE GUARDS OVER ALL SHAFT EXTENSIONS AND DEVICES MOUNTED THEREON.

SHIPPING WEIGHTS & MOTOR COMPATIBILITY

**REDUCER WEIGHTS - SHAFT OUTPUT STYLES D, L, & R

MODEL	SOLID INPUT SHAFT (MOUNTING TYPE A)	C-FRAME QUILL INPUT (MOUNTING TYPE E)							
		56C	143TC 145TC	182TC 184TC	213TC 215TC	254TC 256TC	284TC 286TC	324TC 326TC	364TC 365TC
HB2043	59	61	61	66	-	-	-	-	-
HB2063	93	94	94	100	-	-	-	-	-
HB2073	163	170	170	170	170	-	-	-	-
HB2083	280	-	-	283	283	292	292	-	-
HB2093	434	-	-	430	430	434	434	-	-
HB2103	670	-	-	650	650	670	670	710	710
HB2065	122	122	122	-	-	-	-	-	-
HB2075	198	200	200	204	-	-	-	-	-
HB2085	378	385	385	385	-	-	-	-	-
HB2095	601	-	-	625	-	-	-	-	-
HB2105	837	-	-	861	-	-	-	-	-

**REDUCER WEIGHTS - SHAFT MOUNT (HOLLOW OUTPUT BORE) STYLE S

MODEL	SOLID INPUT SHAFT (MOUNTING TYPE A)	C-FRAME QUILL INPUT (MOUNTING TYPE E)							
		56C	143TC 145TC	182TC 184TC	213TC 215TC	254TC 256TC	284TC 286TC	324TC 326TC	364TC 365TC
HB2043	56	58	58	63	-	-	-	-	-
HB2063	89	90	90	96	-	-	-	-	-
HB2073	154	161	161	161	161	-	-	-	-
HB2083	265	-	-	268	268	277	277	-	-
HB2093	407	-	-	403	403	407	407	-	-
HB2103	630	-	-	600	600	620	620	660	660
HB2065	118	118	118	-	-	-	-	-	-
HB2075	189	191	191	195	-	-	-	-	-
HB2085	363	370	370	370	-	-	-	-	-
HB2095	561	-	-	585	-	-	-	-	-
HB2105	777	-	-	800	-	-	-	-	-

** FOR MOTORIZED REDUCER WEIGHTS, ADD MOTOR WEIGHTS FROM ELECTRIC MOTOR CHARTS IN SECTION H TO REDUCER WEIGHTS SHOWN ON THIS PAGE.

**FOR INTEGRAL GEARMOTOR WEIGHTS, FOLLOW INSTRUCTIONS ABOVE (WITH SIMILAR HP C-FACE MOTOR), AND MULTIPLY BY .95.

MOTOR COMPATIBILITY - C-FRAME QUILL REDUCERS

MODEL	56C	143TC 145TC	182TC 184TC	213TC 215TC	254TC 256TC	284TC 286TC	324TC 326TC	364TC 365TC
HB2043	X	X	X	-	-	-	-	-
HB2063	X	X	X	-	-	-	-	-
HB2073	X	X	X	X	-	-	-	-
HB2083	-	-	X	X	X	X	-	-
HB2093	-	-	X	X	X	X	-	-
HB2103	-	-	X	X	X	X	X	X
HB2065	X	X	-	-	-	-	-	-
HB2075	X	X	X	-	-	-	-	-
HB2085	X	X	X	-	-	-	-	-
HB2095	-	-	X	-	-	-	-	-
HB2105	-	-	X	-	-	-	-	-

FOR FACTORY OPTIONS SEE PAGE L-47